MOLDED PLASTIC DOWELS

ITEM NUMBER	DESCRIPTION	O.D.		LENGTH	
2500470125	047125	.047	(1,19)	1/8	(3,18)
2500470250	047250	.047	(1,19)	1/4	(6,35)
2500470375	047375	.047	(1,19)	3/8	(9,53)
2500470500	047500	.047	(1,19)	1/2	(12,70)
2500620125	062125	.062	(1,57)	1/8	(3,18)
2500620250	062250	.062	(1,57)	1/4	(6,35)
2500620375	062375	.062	(1,57)	3/8	(9,53)
2500620500	062500	.062	(1,57)	1/2	(12,70)
2500930125	093125	.093	(2,36)	1/8	(3,18)
2500930250	093250	.093	(2,36)	1/4	(6,35)
2500930312	930312	.093	(2,36)	5/16	(7,92)
2500930375	093375	.093	(2,36)	3/8	(9,53)
2500930500	093500	.093	(2,36)	1/2	(12,70)
2501221125	122125	.122	(3,10)	1-1/8	(28,58)
2501250125	125125	.125	(3,18)	1/8	(3,18)
2501250187	125187	.125	(3,18)	3/16	(4,76)
2501250250	125250	.125	(3,18)	1/4	(6,35)
2501250375	125375	.125	(3,18)	3/8	(9,53)
2501250500	125500	.125	(3,18)	1/2	(12,70)
2501870125	187125	.187	(4,75)	1/8	(3,18)
2501870250	187250	.187	(4,75)	1/4	(6,35)
2501870375	187375	.187	(4,75)	3/8	(9,53)
2501870500	187500	.187	(4,75)	1/2	(12,70)
2501870625	187625	.187	(4,75)	5/8	(15,88)
2501870750	187750	.187	(4,75)	3/4	(19,05)
2502451250	245250	.245	(6,22)	1-1/4	(31,75)
2502100500	210500	.210	(5,33)	1/2	(12,70)
2502500125	250125	.250	(6,35)	1/8	(3,18)
2502500250	250250	.250	(6,35)	1/4	(6,35)
2502500375	250375	.250	(6,35)	3/8	(9,53)
2502500500	250500	.250	(6,35)	1/2	(12,70)
2502500750	250750	.250	(6,35)	3/4	(19,05)
2503120125	312125	.312	(7,92)	1/8	(3,18)
2503120250	312250	.312	(7,92)	1/4	(6,35)
2503120375	312375	.312	(7,92)	3/8	(9,53)
2503120500	312500	.312	(7,92)	1/2	(12,70)
2503120625	312625	.312	(7,92)	5/8	(15,88)
2503120750	312750	.312	(7,92)	3/4	(19,05)
2504370250	437250	.437	(11,10)	1/4	(6,35)

Uses include dowel pins, stop pins, insulating spacers, switch actuators, and keys. Natural color acetal plastic is standard though they may be molded of other materials. Other lengths are available.

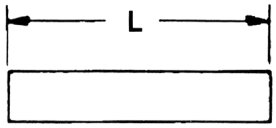

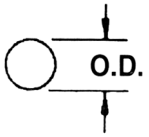

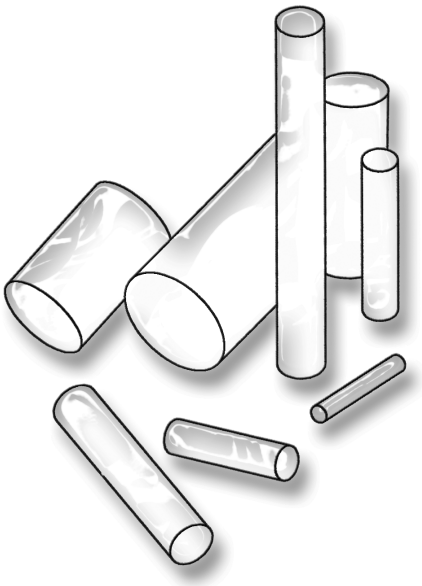

NYLON SPECIAL SNAP-IN STANDOFF

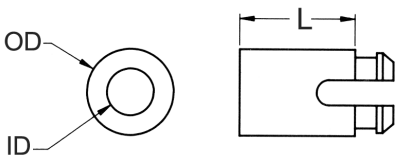

ITEM NUMBER	PANEL THICKNESS	HOLE SIZE	L	OD	ID
13SS003094	1/16" (1,58)	.187 (4,75)	.945 (24,0)	1/4" (6,35)	.106 (2,69)
13SS004018	.062 (1,57)	.187 (4,75)	.187 (4,75)	.250 (6,35)	.125 (3,18)
13SS006025	1/16" (1,58)	.234 (5,95)	1/4" (6,35)	9/32" (7,14)	.153 (3,89)
13SS006037	1/16" (1,58)	.234 (5,95)	3/8"(9,53)	9/32" (7,14)	.153 (3,89)
13SS008037	1/16" (1,58)	.234 (5,95)	3/8" (9,53)	9/32" (7,14)	.169 (4,29)
13SS008050	1/16" (1,58)	.234 (5,95)	1/2"(12,70)	9/32" (7,14)	.169 (4,29)

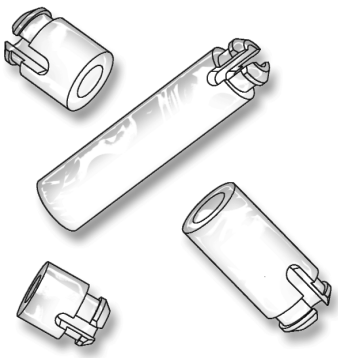

MALE-FEMALE NYLON THREADED STANDOFFS

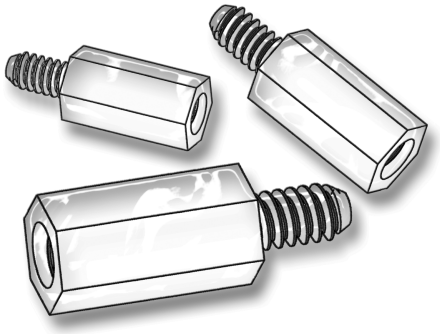

DEPTH OF THREAD IN 1/4" BODY LENGTHS IS 3/16" MINIMUM

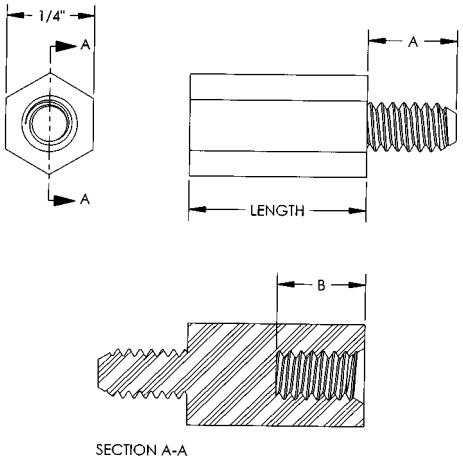

THREAD SIZE	A		B	
440	3/16	(4,76)	3/16	(4,76) Minimum
632	1/4	(6,35)	1/4	(6,35) Minimum
832	3/8	(9,53)	3/8	(9,53) Minimum

ITEM NUMBER	DESCRIPTION	THREAD		L
36440MF025	Standoff	440	1/4	(6,35)
36440MF031	Standoff	440	5/16	(7,94)
36440MF037	Standoff	440	3/8	(9,53)
36440MF050	Standoff	440	1/2	(12,70)
36440MF060	Standoff	440	.600	(15,24)
36440MF062	Standoff	440	5/8	(15,88)
36440MF075	Standoff	440	3/4	(19,05)
36440MF087	Standoff	440	7/8	(22,22)
36440MF100	Standoff	440	1	(25,40)
36440MF112	Standoff	440	1 1/8	(28,58)
36440MF125	Standoff	440	1 1/4	(31,75)
36440MF137	Standoff	440	1 3/8	(34,93)
36440MF150	Standoff	440	1 1/2	(38,10)
36440MF162	Standoff	440	1 5/8	(38,28)
36440MF175	Standoff	440	1 3/4	(44,45)
36440MF200	Standoff	440	2	(50,80)
* 36632MF025	Standoff	632	1/4	(6,35)
** 36632MF026	Standoff	632	17/64	(6,75)
36632MF037	Standoff	632	3/8	(9,53)
36632MF050	Standoff	632	1/2	(12,70)
36632MF056	Standoff	632	9/16	(14,27)
36632MF062	Standoff	632	5/8	(15,88)
36632MF075	Standoff	632	3/4	(19,05)
36632MF087	Standoff	632	7/8	(22,22)
36632MF093	Standoff	632	15/16	(23,81)
36632MF100	Standoff	632	1	(25,40)
36632MF112	Standoff	632	1 1/8	(28,58)
36632MF125	Standoff	632	1 1/4	(31,75)
36632MF131	Standoff	632	1 5/16	(33,32)
36632MF137	Standoff	632	1 3/8	(34,93)
36632MF150	Standoff	632	1 1/2	(38,10)
36632MF162	Standoff	632	1 5/8	(41,28)
36632MF175	Standoff	632	1 3/4	(44,45)
36632MF200	Standoff	632	2	(50,80)
*** 36832MF025	Standoff	832	1/4	(6,35)
**** 36832MF037	Standoff	832	3/8	(9,53)
36832MF050	Standoff	832	1/2	(12,70)
36832MF062	Standoff	832	5/8	(15,88)
36832MF075	Standoff	832	3/4	(19,05)
36832MF087	Standoff	832	7/8	(22,22)
36832MF100	Standoff	832	1	(25,40)
36832MF112	Standoff	832	1 1/8	(28,58)
36832MF125	Standoff	832	1 1/4	(31,75)
36832MF137	Standoff	832	1 3/8	(34,93)
36832MF150	Standoff	832	1 1/2	(38,10)
36832MF162	Standoff	832	1 5/8	(41,28)
36832MF175	Standoff	832	1 3/4	(44,45)
36832MF200	Standoff	832	2	(50,80)

* B = 7/32
** B = 13/64
*** B = .200
**** B = .270

STANDARD NYLON SPACERS

ITEM NUMBER	DESCRIPTION	A		B		L		SCREW
13SP000	SP 0	1/8	(3,18)	.063	(1,60)	3/16	(4,76)	0
13SP001	SP 1	3/16	(4,76)	.091	(2,31)	1/8	(3,18)	2
13SP002	SP 2	3/16	(4,76)	.115	(2,92)	1/8	(3,18)	4
13SP003	SP 3	3/16	(4,76)	.091	(2,31)	3/16	(4,76)	2
13SP004	SP 4	3/16	(4,76)	.115	(2,92)	3/16	(4,76)	4
13SP005	SP 5	3/16	(4,76)	.091	(2,31)	1/4	(6,35)	2
13SP006	SP 6	3/16	(4,76)	.115	(2,92)	1/4	(6,35)	4
13SP007	SP 7	3/16	(4,76)	.091	(2,31)	5/16	(7,94)	2
13SP008	SP 8	3/16	(4,76)	.115	(2,92)	5/16	(7,94)	4
13SP009	SP 9	3/16	(4,76)	.091	(2,31)	3/8	(9,53)	2
13SP010	SP 10	3/16	(4,76)	.115	(2,92)	3/8	(9,53)	4
13SP011	SP 11	3/16	(4,76)	.091	(2,31)	7/16	(11,11)	2
13SP012	SP 12	3/16	(4,76)	.115	(2,92)	7/16	(11,11)	4
13SP013	SP 13	3/16	(4,76)	.091	(2,31)	1/2	(12,70)	2
13SP014	SP 14	3/16	(4,76)	.115	(2,92)	1/2	(12,70)	4
13SP015	SP 15	3/16	(4,76)	.091	(2,31)	9/16	(14,29)	2
13SP016	SP 16	3/16	(4,76)	.115	(2,92)	9/16	(14,29)	4
13SP017	SP 17	3/16	(4,76)	.091	(2,31)	5/8	(15,88)	2
13SP018	SP 18	3/16	(4,76)	.115	(2,92)	5/8	(15,88)	4
13SP019	SP 19	3/16	(4,76)	.091	(2,31)	11/16	(17,46)	2
13SP020	SP 20	3/16	(4,76)	.115	(2,92)	11/16	(17,46)	4
13SP021	SP 21	3/16	(4,76)	.091	(2,31)	3/4	(19,05)	2
13SP022	SP 22	3/16	(4,76)	.115	(2,92)	3/4	(19,05)	4
13SP023	SP 23	3/16	(4,76)	.091	(2,31)	13/16	(20,64)	2
13SP024	SP 24	3/16	(4,76)	.115	(2,92)	13/16	(20,64)	4
13SP025	SP 25	3/16	(4,76)	.091	(2,31)	7/8	(22,22)	2
13SP026	SP 26	3/16	(4,76)	.115	(2,92)	7/8	(22,22)	4
13SP027	SP 27	3/16	(4,76)	.091	(2,31)	15/16	(23,81)	2
13SP028	SP 28	3/16	(4,76)	.115	(2,92)	15/16	(23,81)	4
13SP029	SP 29	3/16	(4,76)	.091	(2,31)	1	(25,40)	2
13SP030	SP 30	3/16	(4,76)	.115	(2,92)	1	(25,40)	4
13SP031	SP 31	1/4	(6,35)	.091	(2,31)	1/8	(3,18)	2
13SP032	SP 32	1/4	(6,35)	.115	(2,92)	1/8	(3,18)	4
13SP033	SP 33	1/4	(6,35)	.140	(3,56)	1/8	(3,18)	6
13SP034	SP 34	1/4	(6,35)	.171	(4,34)	1/8	(3,18)	8
13SP035	SP 35	1/4	(6,35)	.091	(2,31)	3/16	(4,76)	2
13SP036	SP 36	1/4	(6,35)	.115	(2,92)	3/16	(4,76)	4
13SP037	SP 37	1/4	(6,35)	.140	(3,56)	3/16	(4,76)	6
13SP038	SP 38	1/4	(6,35)	.171	(4,34)	3/16	(4,76)	8
13SP039	SP 39	1/4	(6,35)	.091	(2,31)	1/4	(6,35)	2
13SP040	SP 40	1/4	(6,35)	.115	(2,92)	1/4	(6,35)	4
13SP041	SP 41	1/4	(6,35)	.140	(3,56)	1/4	(6,35)	6
13SP042	SP 42	1/4	(6,35)	.171	(4,34)	1/4	(6,35)	8
13SP043	SP 43	1/4	(6,35)	.091	(2,31)	5/16	(7,94)	2
13SP044	SP 44	1/4	(6,35)	.115	(2,92)	5/16	(7,94)	4
13SP045	SP 45	1/4	(6,35)	.140	(3,56)	5/16	(7,94)	6
13SP046	SP 46	1/4	(6,35)	.171	(4,34)	5/16	(7,94)	8
13SP047	SP 47	1/4	(6,35)	.091	(2,31)	3/8	(9,53)	2
13SP048	SP 48	1/4	(6,35)	.115	(2,92)	3/8	(9,53)	4
13SP049	SP 49	1/4	(6,35)	.140	(3,56)	3/8	(9,53)	6
13SP050	SP 50	1/4	(6,35)	.171	(4,34)	3/8	(9,53)	8
13SP051	SP 51	1/4	(6,35)	.091	(2,31)	7/16	(11,11)	2
13SP052	SP 52	1/4	(6,35)	.115	(2,92)	7/16	(11,11)	4
13SP053	SP 53	1/4	(6,35)	.140	(3,56)	7/16	(11,11)	6
13SP054	SP 54	1/4	(6,35)	.171	(4,34)	7/16	(11,11)	8

METRIC Sizes Also Available
Page 243

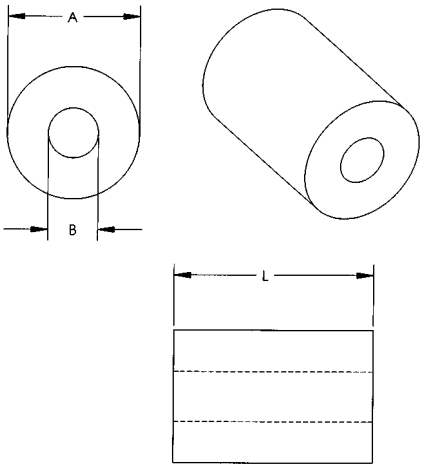

ALL STANDARD NYLON SPACERS CAN BE TAPPED TWO THREAD SIZES LARGER THAN THE SCREW SIZE LISTED.

FOR EXAMPLE:
13SP023 WITH A SCREW SIZE OF 2 CAN BE TAPPED 440 THREAD.

TO ORDER A TAPPED SPACER, SIMPLY ADD A "T" TO THE PART NUMBER.

FOR EXAMPLE:
13SP101 BECOMES 13TSP101

SECTION
V

STANDARD NYLON SPACERS

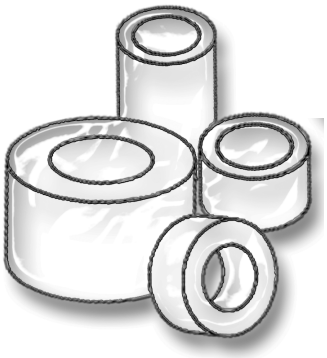

METRIC Sizes Also Available

Page 243

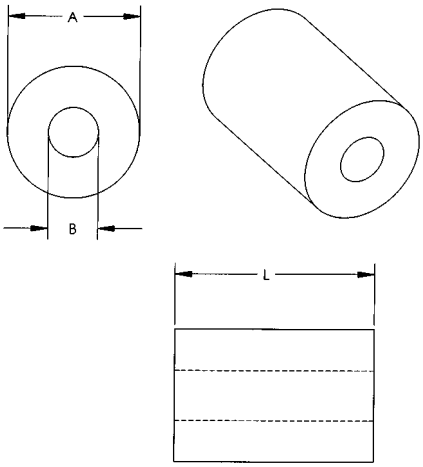

ALL STANDARD NYLON SPACERS CAN BE TAPPED TWO THREAD SIZES LARGER THAN THE SCREW SIZE LISTED.

FOR EXAMPLE:
13SP023 WITH A SCREW SIZE OF 2 CAN BE TAPPED 440 THREAD.

TO ORDER A TAPPED SPACER, SIMPLY ADD A "T" TO THE PART NUMBER.

FOR EXAMPLE:
13SP101 BECOMES 13TSP101

ITEM NUMBER	DESCRIPTION	A		B		L		SCREW
13SP055	SP 55	1/4	(6,35)	.091	(2,31)	1/2	(12,70)	2
13SP056	SP 56	1/4	(6,35)	.115	(2,92)	1/2	(12,70)	4
13SP057	SP 57	1/4	(6,35)	.140	(3,56)	1/2	(12,70)	6
13SP058	SP 58	1/4	(6,35)	.171	(4,34)	1/2	(12,70)	8
13SP059	SP 59	1/4	(6,35)	.091	(2,31)	9/16	(14,29)	2
13SP060	SP 60	1/4	(6,35)	.115	(2,92)	9/16	(14,29)	4
13SP061	SP 61	1/4	(6,35)	.140	(3,56)	9/16	(14,29)	6
13SP062	SP 62	1/4	(6,35)	.171	(4,34)	9/16	(14,29)	8
13SP063	SP 63	1/4	(6,35)	.091	(2,31)	5/8	(15,88)	2
13SP064	SP 64	1/4	(6,35)	.115	(2,92)	5/8	(15,88)	4
13SP065	SP 65	1/4	(6,35)	.140	(3,56)	5/8	(15,88)	6
13SP066	SP 66	1/4	(6,35)	.171	(4,34)	5/8	(15,88)	8
13SP067	SP 67	1/4	(6,35)	.091	(2,31)	11/16	(17,46)	2
13SP068	SP 68	1/4	(6,35)	.115	(2,92)	11/16	(17,46)	4
13SP069	SP 69	1/4	(6,35)	.140	(3,56)	11/16	(17,46)	6
13SP070	SP 70	1/4	(6,35)	.171	(4,34)	11/16	(17,46)	8
13SP071	SP 71	1/4	(6,35)	.091	(2,31)	3/4	(19,05)	2
13SP072	SP 72	1/4	(6,35)	.115	(2,92)	3/4	(19,05)	4
13SP073	SP 73	1/4	(6,35)	.140	(3,56)	3/4	(19,05)	6
13SP074	SP 74	1/4	(6,35)	.171	(4,34)	3/4	(19.05)	8
13SP075	SP 75	1/4	(6,35)	.091	(2,31)	13/16	(20,64)	2
13SP076	SP 76	1/4	(6,35)	.115	(2,92)	13/16	(20,64)	4
13SP077	SP 77	1/4	(6,35)	.140	(3,56)	13/16	(20,64)	6
13SP078	SP 78	1/4	(6,35)	.171	(4,34)	13/16	(20,64)	8
13SP079	SP 79	1/4	(6,35)	.091	(2,31)	7/8	(22,22)	2
13SP080	SP 80	1/4	(6,35)	.115	(2,92)	7/8	(22,22)	4
13SP081	SP 81	1/4	(6,35)	.140	(3,56)	7/8	(22,22)	6
13SP082	SP 82	1/4	(6,35)	.171	(4,34)	7/8	(22,22)	8
13SP083	SP 83	1/4	(6,35)	.091	(2,31)	15/16	(23,81)	2
13SP084	SP 84	1/4	(6,35)	.115	(2,92)	15/16	(23,81)	4
13SP085	SP 85	1/4	(6,35)	.140	(3,56)	15/16	(23,81)	6
13SP086	SP 86	1/4	(6,35)	.171	(4,34)	15/16	(23,81)	8
13SP087	SP 87	1/4	(6,35)	.091	(2,31)	1	(25,40)	2
13SP088	SP 88	1/4	(6,35)	.115	(2,92)	1	(25,40)	4
13SP089	SP 89	1/4	(6,35)	.140	(3,56)	1	(25,40)	6
13SP090	SP 90	1/4	(6,35)	.171	(4,34)	1	(25,40)	8
13SP091	SP 91	5/16	(7,94)	.115	(2,92)	1/8	(3,18)	4
13SP092	SP 92	5/16	(7,94)	.140	(3,56)	1/8	(3,18)	6
13SP093	SP 93	5/16	(7,94)	.171	(4,34)	1/8	(3,18)	8
13SP094	SP 94	5/16	(7,94)	.194	(4,93)	1/8	(3,18)	10
13SP095	SP 95	5/16	(7,94)	.115	(2,92)	3/16	(4,76)	4
13SP096	SP 96	5/16	(7,94)	.140	(3,56)	3/16	(4,76)	6
13SP097	SP 97	5/16	(7,94)	.171	(4,34)	3/16	(4,76)	8
13SP098	SP 98	5/16	(7,94)	.194	(4,93)	3/16	(4,76)	10
13SP099	SP 99	5/16	(7,94)	.115	(2,92)	1/4	(6,35)	4
13SP100	SP100	5/16	(7,94)	.140	(3,56)	1/4	(6,35)	6
13SP101	SP101	5/16	(7,94)	.171	(4,34)	1/4	(6,35)	8
13SP102	SP102	5/16	(7,94)	.194	(4,93)	1/4	(6,35)	10
13SP103	SP103	5/16	(7,94)	.115	(2,92)	5/16	(7,94)	4
13SP104	SP104	5/16	(7,94)	.140	(3,56)	5/16	(7,94)	6
13SP105	SP105	5/16	(7,94)	.171	(4,34)	5/16	(7,94)	8
13SP106	SP106	5/16	(7,94)	.194	(4,93)	5/16	(7,94)	10
13SP107	SP107	5/16	(7,94)	.115	(2,92)	3/8	(9,53)	4
13SP108	SP108	5/16	(7,94)	.140	(3,56)	3/8	(9,53)	6
13SP109	SP109	5/16	(7,94)	.171	(4,34)	3/8	(9,53)	8

STANDARD NYLON SPACERS

ITEM NUMBER	DESCRIPTION	A		B		L		SCREW
13SP110	SP110	5/16	(7,94)	.194	(4,93)	3/8	(9,53)	10
13SP111	SP111	5/16	(7,94)	.115	(2,92)	7/16	(11,11)	4
13SP112	SP112	5/16	(7,94)	.140	(3,56)	7/16	(11,11)	6
13SP113	SP113	5/16	(7,94)	.171	(4,34)	7/16	(11,11)	8
13SP114	SP114	5/16	(7,94)	.194	(4,93)	7/16	(11,11)	10
13SP115	SP115	5/16	(7,94)	.115	(2,92)	1/2	(12,70)	4
13SP116	SP116	5/16	(7,94)	.140	(3,56)	1/2	(12,70)	6
13SP117	SP117	5/16	(7,94)	.171	(4,34)	1/2	(12,70)	8
13SP118	SP118	5/16	(7,94)	.194	(4,93)	1/2	(12,70)	10
13SP119	SP119	5/16	(7,94)	.115	(2,92)	9/16	(14,29)	4
13SP120	SP120	5/16	(7,94)	.140	(3,56)	9/16	(14,29)	6
13SP121	SP121	5/16	(7,94)	.171	(4,34)	9/16	(14,29)	8
13SP122	SP122	5/16	(7,94)	.194	(4,93)	9/16	(14,29)	10
13SP123	SP123	5/16	(7,94)	.115	(2,92)	5/8	(15,88)	4
13SP124	SP124	5/16	(7,94)	.140	(3,56)	5/8	(15,88)	6
13SP125	SP125	5/16	(7,94)	.171	(4,34)	5/8	(15,88)	8
13SP126	SP126	5/16	(7,94)	.194	(4,93)	5/8	(15,88)	10
13SP127	SP127	5/16	(7,94)	.115	(2,92)	11/16	(17,46)	4
13SP128	SP128	5/16	(7,94)	.140	(3,56)	11/16	(17,46)	6
13SP129	SP129	5/16	(7,94)	.171	(4,34)	11/16	(17,46)	8
13SP130	SP130	5/16	(7,94)	.194	(4,93)	11/16	(17,46)	10
13SP131	SP131	5/16	(7,94)	.115	(2,92)	3/4	(19,05)	4
13SP132	SP132	5/16	(7,94)	.140	(3,56)	3/4	(19,05)	6
13SP133	SP133	5/16	(7,94)	.171	(4,34)	3/4	(19,05)	8
13SP134	SP134	5/16	(7,94)	.194	(4,93)	3/4	(19,05)	10
13SP135	SP135	5/16	(7,94)	.115	(2,92)	13/16	(20,63)	4
13SP136	SP136	5/16	(7,94)	.140	(3,56)	13/16	(20,63)	6
13SP137	SP137	5/16	(7,94)	.171	(4,34)	13/16	(20,63)	8
13SP138	SP138	5/16	(7,94)	.194	(4,93)	13/16	(20,63)	10
13SP139	SP139	5/16	(7,94)	.115	(2,92)	7/8	(22,22)	4
13SP140	SP140	5/16	(7,94)	.140	(3,56)	7/8	(22,22)	6
13SP141	SP141	5/16	(7,94)	.171	(4,34)	7/8	(22,22)	8
13SP142	SP142	5/16	(7,94)	.194	(4,93)	7/8	(22,22)	10
13SP143	SP143	5/16	(7,94)	.115	(2,92)	15/16	(23,81)	4
13SP144	SP144	5/16	(7,94)	.140	(3,56)	15/16	(23,81)	6
13SP145	SP145	5/16	(7,94)	.171	(4,34)	15/16	(23,81)	8
13SP146	SP146	5/16	(7,94)	.194	(4,93)	15/16	(23,81)	10
13SP147	SP147	5/16	(7,94)	.115	(2,92)	1	(25,40)	4
13SP148	SP148	5/16	(7,94)	.140	(3,56)	1	(25,40)	6
13SP149	SP149	5/16	(7,94)	.171	(4,34)	1	(25,40)	8
13SP150	SP150	5/16	(7,94)	.194	(4,93)	1	(25,40)	10
13SP158	SP158	3/8	(9,53)	.140	(3,56)	1/8	(3,18)	6
13SP159	SP159	3/8	(9,53)	.171	(4,34)	1/8	(3,18)	8
13SP160	SP160	3/8	(9,53)	.194	(4,93)	1/8	(3,18)	10
13SP161	SP161	3/8	(9,53)	.140	(3,56)	3/16	(4,76)	6
13SP162	SP162	3/8	(9,53)	.171	(4,34)	3/16	(4,76)	8
13SP163	SP163	3/8	(9,53)	.194	(4,93)	3/16	(4,76)	10
13SP164	SP164	3/8	(9,53)	.140	(3,56)	1/4	(6,35)	6
13SP165	SP165	3/8	(9,53)	.171	(4,34)	1/4	(6,35)	8
13SP166	SP166	3/8	(9,53)	.194	(4,93)	1/4	(6,35)	10
13SP167	SP167	3/8	(9,53)	.140	3,56)	5/16	(7,94)	6
13SP168	SP168	3/8	(9,53)	.171	(4,34)	5/16	(7,94)	8
13SP169	SP169	3/8	(9,53)	.194	(4,93)	5/16	(7,94)	10
13SP170	SP170	3/8	(9,53)	.140	(3,56)	3/8	(9,53)	6
13SP171	SP171	3/8	(9,53)	.171	(4,34)	3/8	(9,53)	8

METRIC Sizes Also Available
Page 243

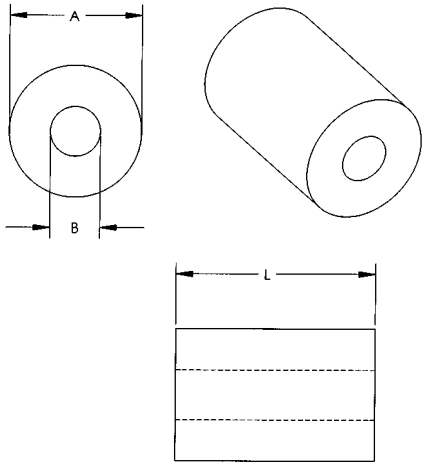

ALL STANDARD NYLON SPACERS CAN BE TAPPED TWO THREAD SIZES LARGER THAN THE SCREW SIZE LISTED.

FOR EXAMPLE:
13SP023 WITH A SCREW SIZE OF 2 CAN BE TAPPED 440 THREAD.

TO ORDER A TAPPED SPACER, SIMPLY ADD A "T" TO THE PART NUMBER.

FOR EXAMPLE:
13SP101 BECOMES 13TSP101

SECTION
V

STANDARD NYLON SPACERS

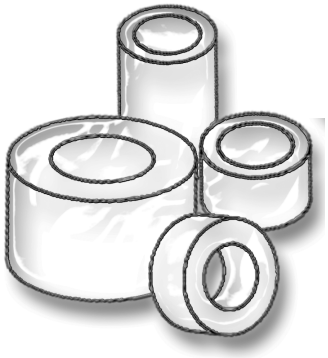

METRIC Sizes Also Available

Page 243

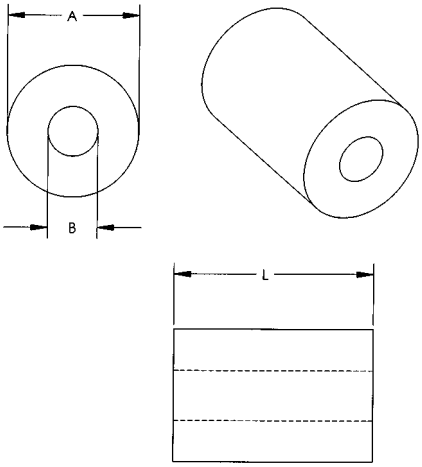

ALL STANDARD NYLON SPACERS CAN BE TAPPED TWO THREAD SIZES LARGER THAN THE SCREW SIZE LISTED.

FOR EXAMPLE:
13SP023 WITH A SCREW SIZE OF 2 CAN BE TAPPED 440 THREAD.

TO ORDER A TAPPED SPACER, SIMPLY ADD A "T" TO THE PART NUMBER.

FOR EXAMPLE:
13SP101 BECOMES 13TSP101

ITEM NUMBER	DESCRIPTION	A		B		L		SCREW
13SP172	SP172	3/8	(9,53)	.194	(4,93)	3/8	(9,53)	10
13SP173	SP173	3/8	(9,53)	.140	(3,56)	7/16	(11,11)	6
13SP174	SP174	3/8	(9,53)	.171	(4,34)	7/16	(11,11)	8
13SP175	SP175	3/8	(9,53)	.194	(4,93)	7/16	(11,11)	10
13SP176	SP176	3/8	(9,53)	.140	(3,56)	1/2	(12,70)	6
13SP177	SP177	3/8	(9,53)	.171	(4,34)	1/2	(12,70)	8
13SP178	SP178	3/8	(9,53)	.194	(4,93)	1/2	(12,70)	10
13SP179	SP179	3/8	(9,53)	.140	(3,56)	9/16	(14,29)	6
13SP180	SP180	3/8	(9,53)	.171	(4,34)	9/16	(14,29)	8
13SP181	SP181	3/8	(9,53)	.194	(4,93)	9/16	(14,29)	10
13SP182	SP182	3/8	(9,53)	.140	(3,56)	5/8	(15,88)	6
13SP183	SP183	3/8	(9,53)	.171	(4,34)	5/8	(15,88)	8
13SP184	SP184	3/8	(9,53)	.194	(4,93)	5/8	(15,88)	10
13SP185	SP185	3/8	(9,53)	.140	(3,56)	11/16	(17,46)	6
13SP186	SP186	3/8	(9,53)	.171	(4,34)	11/16	(17,46)	8
13SP187	SP187	3/8	(9,53)	.194	(4,93)	11/16	(17,46)	10
13SP188	SP188	3/8	(9,53)	.140	(3,56)	3/4	(19,05)	6
13SP189	SP189	3/8	(9,53)	.171	(4,34)	3/4	(19,05)	8
13SP190	SP190	3/8	(9,53)	.194	(4,93)	3/4	(19,05)	10
13SP191	SP191	3/8	(9,53)	.140	(3,56)	13/16	(20,64)	6
13SP192	SP192	3/8	(9,53)	.171	(4,34)	13/16	(20,64)	8
13SP193	SP193	3/8	(9,53)	.194	(4,93)	13/16	(20,64)	10
13SP194	SP194	3/8	(9,53)	.140	(3,56)	7/8	(22,22)	6
13SP195	SP195	3/8	(9,53)	.171	(4,34)	7/8	(22,22)	8
13SP196	SP196	3/8	(9,53)	.194	(4,93)	7/8	(22,22)	10
13SP197	SP197	3/8	(9,53)	.140	(3,56)	15/16	(23,81)	6
13SP198	SP198	3/8	(9,53)	.171	(4,34)	15/16	(23,81)	8
13SP199	SP199	3/8	(9,53)	.194	(4,93)	15/16	(23,81)	10
13SP200	SP200	3/8	(9,53)	.140	(3,56)	1	(25,40)	6
13SP201	SP201	3/8	(9,53)	.171	(4,34)	1	(25,40)	8
13SP202	SP202	3/8	(9,53)	.194	(4,93)	1	(25,40)	10
13SP203	SP203	1/2	(12,70)	.140	(3,56)	1/8	(3,18)	6
13SP204	SP204	1/2	(12,70)	.171	(4,34)	1/8	(3,18)	8
13SP205	SP205	1/2	(12,70)	.194	(4,93)	1/8	(3,18)	10
13SP206	SP206	1/2	(12,70)	.219	(5,56)	1/8	(3,18)	12
13SP207	SP207	1/2	(12,70)	.260	(6,60)	1/8	(3,18)	1/4
13SP208	SP208	1/2	(12,70)	.140	(3,56)	3/16	(4,76)	6
13SP209	SP209	1/2	(12,70)	.171	(4,34)	3/16	(4,76)	8
13SP210	SP210	1/2	(12,70)	.194	(4,93)	3/16	(4,76)	10
13SP211	SP211	1/2	(12,70)	.219	(5,56)	3/16	(4,76)	12
13SP212	SP212	1/2	(12,70)	.260	(6,60)	3/16	(4,76)	1/4
13SP213	SP213	1/2	(12,70)	.140	(3,56)	1/4	(6,35)	6
13SP214	SP214	1/2	(12,70)	.171	(4,34)	1/4	(6,35)	8
13SP215	SP215	1/2	(12,70)	.194	(4,93)	1/4	(6,35)	10
13SP216	SP216	1/2	(12,70)	.219	(5,56)	1/4	(6,35)	12
13SP217	SP217	1/2	(12,70)	.260	(6,60)	1/4	(6,35)	1/4
13SP218	SP218	1/2	(12,70)	.140	(3,56)	5/16	(7,94)	6
13SP219	SP219	1/2	(12,70)	.171	(4,34)	5/16	(7,94)	8
13SP220	SP220	1/2	(12,70)	.194	(4,93)	5/16	(7,94)	10
13SP221	SP221	1/2	(12,70)	.219	(5,56)	5/16	(7,94)	12
13SP222	SP222	1/2	(12,70)	.257	(6,53)	5/16	(7,94)	1/4
13SP223	SP223	1/2	(12,70)	.140	(3,56)	3/8	(9,53)	6
13SP224	SP224	1/2	(12,70)	.171	(4,34)	3/8	(9,53)	8

STANDARD NYLON SPACERS

ITEM NUMBER	DESCRIPTION	A		B		L		SCREW
13SP225	SP225	1/2	(12,70)	.194	(4,93)	3/8	(9,53)	10
13SP226	SP226	1/2	(12,70)	.219	(5,56)	3/8	(9,53)	12
13SP227	SP227	1/2	(12,70)	.257	(6,53)	3/8	(9,53)	1/4
13SP228	SP228	1/2	(12,70)	.140	(3,56)	7/16	(11,11)	6
13SP229	SP229	1/2	(12,70)	.171	(4,34)	7/16	(11,11)	8
13SP230	SP230	1/2	(12,70)	.194	(4,93)	7/16	(11,11)	10
13SP231	SP231	1/2	(12,70)	.219	(5,56)	7/16	(11,11)	12
13SP232	SP232	1/2	(12,70)	.257	(6,53)	7/16	(11,11)	1/4
13SP233	SP233	1/2	(12,70)	.140	(3,56)	1/2	(12,70)	6
13SP234	SP234	1/2	(12,70)	.171	(4,34)	1/2	(12,70)	8
13SP235	SP235	1/2	(12,70)	.194	(4,93)	1/2	(12,70)	10
13SP236	SP236	1/2	(12,70)	.219	(5,56)	1/2	(12,70)	12
13SP237	SP237	1/2	(12,70)	.257	(6,53)	1/2	(12,70)	1/4
13SP238	SP238	1/2	(12,70)	.140	(3,56)	9/16	(14,29)	6
13SP239	SP239	1/2	(12,70)	.171	(4,34)	9/16	(14,29)	8
13SP240	SP240	1/2	(12,70)	.194	(4,93)	9/16	(14,29)	10
13SP241	SP241	1/2	(12,70)	.219	(5,56)	9/16	(14,29)	12
13SP242	SP242	1/2	(12,70)	.257	(6,53)	9/16	(14,29)	1/4
13SP243	SP243	1/2	(12,70)	.140	(3,56)	5/8	(15,88)	6
13SP244	SP244	1/2	(12,70)	.171	(4,34)	5/8	(15,88)	8
13SP245	SP245	1/2	(12,70)	.194	(4,93)	5/8	(15,88)	10
13SP246	SP246	1/2	(12,70)	.219	(5,56)	5/8	(15,88)	12
13SP247	SP247	1/2	(12,70)	.257	(6,53)	5/8	(15,88)	1/4
13SP248	SP248	1/2	(12,70)	.140	(3,56)	11/16	(17,46)	6
13SP249	SP249	1/2	(12,70)	.171	(4,34)	11/16	(17,46)	8
13SP250	SP250	1/2	(12,70)	.194	(4,93)	11/16	(17,46)	10
13SP251	SP251	1/2	(12,70)	.219	(5,56)	11/16	(17,46)	12
13SP252	SP252	1/2	(12,70)	.257	(6,53)	11/16	(17,46)	1/4
13SP253	SP253	1/2	(12,70)	.140	(3,56)	3/4	(19,05)	6
13SP254	SP254	1/2	(12,70)	.171	(4,34)	3/4	(19,05)	8
13SP255	SP255	1/2	(12,70)	.194	(4,93)	3/4	(19,05)	10
13SP256	SP256	1/2	(12,70)	.219	(5,56)	3/4	(19,05)	12
13SP257	SP257	1/2	(12,70)	.260	(6,60)	3/4	(19,05)	1/4
13SP258	SP258	1/2	(12,70)	.140	(3,56)	13/16	(20,64)	6
13SP259	SP259	1/2	(12,70)	.171	(4,34)	13/16	(20,64)	8
13SP260	SP260	1/2	(12,70)	.194	(4,93)	13/16	(20,64)	10
13SP261	SP261	1/2	(12,70)	.219	(5,56)	13/16	(20,64)	12
13SP262	SP262	1/2	(12,70)	.260	(6,60)	13/16	(20,64)	1/4
13SP263	SP263	1/2	(12,70)	.140	(3,56)	7/8	(22,22)	6
13SP264	SP264	1/2	(12,70)	.171	(4,34)	7/8	(22,22)	8
13SP265	SP265	1/2	(12,70)	.194	(4,93)	7/8	(22,22)	10
13SP266	SP266	1/2	(12,70)	.219	(5,56)	7/8	(22,22)	12
13SP267	SP267	1/2	(12,70)	.260	(6,60)	7/8	(22,22)	1/4
13SP268	SP268	1/2	(12,70)	.140	(3,56)	15/16	(23,81)	6
13SP269	SP269	1/2	(12,70)	.171	(4,34)	15/16	(23,81)	8
13SP270	SP270	1/2	(12,70)	.194	(4,93)	15/16	(23,81)	10
13SP271	SP271	1/2	(12,70)	.219	(5,56)	15/16	(23,81)	12
13SP272	SP272	1/2	(12,70)	.257	(6,53)	15/16	(23,81)	1/4
13SP273	SP273	1/2	(12,70)	.140	(3,56)	1	(25,40)	6
13SP274	SP274	1/2	(12,70)	.171	(4,34)	1	(25,40)	8
13SP275	SP275	1/2	(12,70)	.194	(4,93)	1	(25,40)	10
13SP276	SP276	1/2	(12,70)	.219	(5,56)	1	(25,40)	12
13SP277	SP277	1/2	(12,70)	.257	(6,53)	1	(25,40)	1/4

METRIC Sizes Also Available
Page 243

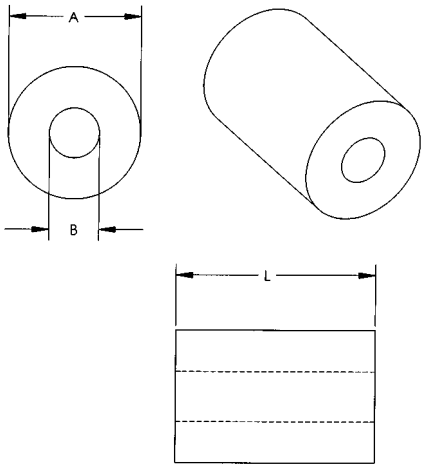

ALL STANDARD NYLON SPACERS CAN BE TAPPED TWO THREAD SIZES LARGER THAN THE SCREW SIZE LISTED.

FOR EXAMPLE:
13SP023 WITH A SCREW SIZE OF 2 CAN BE TAPPED 440 THREAD.

TO ORDER A TAPPED SPACER, SIMPLY ADD A "T" TO THE PART NUMBER.

FOR EXAMPLE:
13SP101 BECOMES 13TSP101

SECTION
V

STANDARD LONG NYLON SPACERS

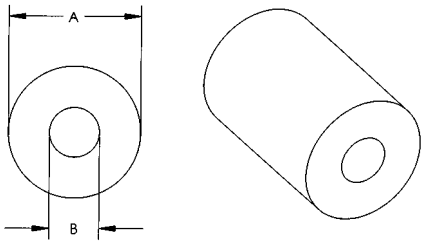

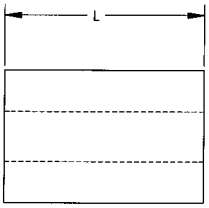

Tough and resilient, nylon spacers are useful for many applications. Ideal for use in electrical and electronic assemblies, they also can be used as bushings, bearings, rollers, and glides. Molded from corrosion resistant Type 66 Nylon, all parts are available on short delivery from standard tooling. Samples for testing are available but NOT ALL SIZES are in stock. Special sizes and lengths at a slight extra tooling charge. Parts are stocked in Nylon 6/6 UL 94V2 Parts can be furnished in: Acetal, Resin TICONA Celcon M-90 UL 94HB

Tolerances: O.D. +/-.015; I.D. +/-.005; Length +/-.015

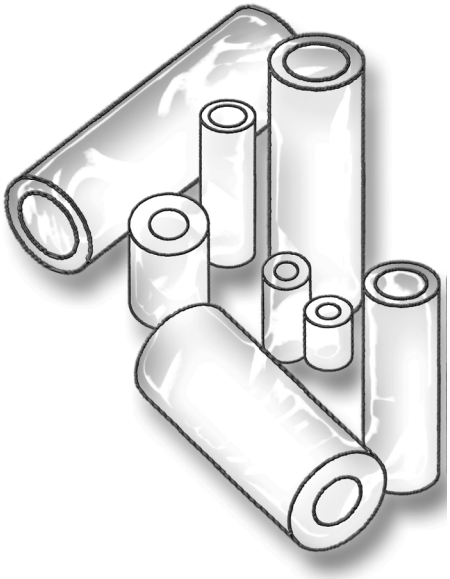

ITEM NUMBER	DESCRIPTION	A	B	L
13SP300	SP 300	1/4 (6,35)	.115 (2,92)	1 -1/16 (27,00)
13SP301	SP 301	1/4 (6,35)	.140 (3,56)	1 -1/16 (27,00)
13SP304	SP 304	1/4 (6,35)	.115 (2,92)	1-1/8 (28,58)
13SP305	SP 305	1/4 (6,35)	.140 (3,56)	1-1/8 (28,58)
13SP308	SP 308	1/4 (6,35)	.115 (2,92)	1-3/16 (30,18)
13SP309	SP 309	1/4 (6,35)	.140 (3,56)	1-3/16 (30,18)
13SP312	SP 312	1/4 (6,35)	.115 (2,92)	1-1/4 (31,75)
13SP313	SP 313	1/4 (6,35)	.140 (3,56)	1-1/4 (31,75)
13SP316	SP 316	1/4 (6,35)	.115 (2,92)	1-5/16 (33,35)
13SP317	SP 317	1/4 (6,35)	.140 (3,56)	1-5/16 (33,35)
13SP320	SP 320	1/4 (6,35)	.115 (2,92)	1-3/8 (34,93)
13SP321	SP 321	1/4 (6,35)	.140 (3,56)	1-3/8 (34,93)
13SP324	SP 324	1/4 (6,35)	.115 (2,92)	1-7/16 (36,53)
13SP325	SP 325	1/4 (6,35)	.140 (3,56)	1-7/16 (36,53)
13SP328	SP 328	1/4 (6,35)	.115 (2,92)	1-1/2 (38,10)
13SP329	SP 329	1/4 (6,35)	.140 (3,56)	1-1/2 (38,10)
13SP335	SP 335	5/16 (7,94)	.115 (2,92)	1-1/16 (27,00)
13SP336	SP 336	5/16 (7,94)	.140 (3,56)	1-1/16 (27,00)
13SP337	SP 337	5/16 (7,94)	.171 (4,34)	1-1/16 (27,00)
13SP338	SP 338	5/16 (7,94)	.194 (4,93)	1-1/16 (27,00)
13SP339	SP 339	5/16 (7,94)	.115 (2,92)	1-1/8 (28,58)
13SP340	SP 340	5/16 (7,94)	.140 (3,56)	1-1/8 (28,58)
13SP341	SP 341	5/16 (7,94)	.171 (4,34)	1-1/8 (28,58)
13SP342	SP 342	5/16 (7,94)	.194 (4,93)	1-1/8 (28,58)
13SP343	SP 343	5/16 (7,94)	.115 (2,92)	1-3/16 (30,18)
13SP344	SP 344	5/16 (7,94)	.140 (3,56)	1-3/16 (30,18)
13SP345	SP 345	5/16 (7,94)	.171 (4,34)	1-3/16 (30,18)
13SP346	SP 346	5/16 (7,94)	.194 (4,93)	1-3/16 (30,18)
13SP347	SP 347	5/16 (7,94)	.115 (2,92)	1-1/4 (31,75)
13SP348	SP 348	5/16 (7,94)	.140 (3,56)	1-1/4 (31,75)
13SP349	SP 349	5/16 (7,94)	.171 (4,34)	1-1/4 (31,75)
13SP350	SP 350	5/16 (7,94)	.194 (4,93)	1-1/4 (31,75)
13SP351	SP 351	5/16 (7,94)	.115 (2,92)	1-5/16 (33,35)
13SP352	SP 352	5/16 (7,94)	.140 (3,56)	1-5/16 (33,35)
13SP353	SP 353	5/16 (7,94)	.171 (4,34)	1-5/16 (33,35)
13SP354	SP 354	5/16 (7,94)	.194 (4,93)	1-5/16 (33,35)

STANDARD LONG NYLON SPACERS

Tough and resilient, nylon spacers are useful for many applications. Ideal for use in electrical and electronic assemblies, they also can be used as bushings, bearings, rollers, and glides. Molded from corrosion resistant Type 66 Nylon, all parts are available on short delivery from standard tooling. Samples for testing are available but NOT ALL SIZES are in stock. Special sizes and lengths at a slight extra tooling charge. Parts are stocked in Nylon 6/6 UL 94V2 Parts can be furnished in: Acetal, Resin TICONA Celcon M-90 UL 94HB

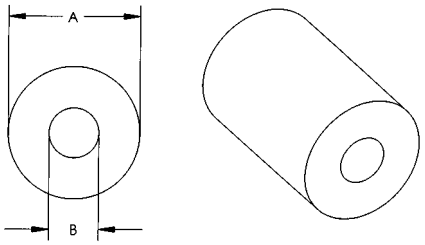

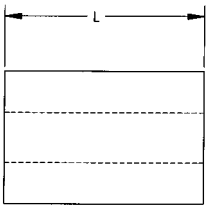

Tolerances: O.D. +/-.015; I.D. +/-.005; Length +/-.015

ITEM NUMBER	DESCRIPTION	A		B		L	
13SP355	SP 355	5/16	(7,94)	.115	(2,92)	1-3/8	(34,93)
13SP356	SP 356	5/16	(7,94)	.140	(3,56)	1-3/8	(34,93)
13SP357	SP 357	5/16	(7,94)	.171	(4,34)	1-3/8	(34,93)
13SP358	SP 358	5/16	(7,94)	.194	(4,93)	1-3/8	(34,93)
13SP359	SP 359	5/16	(7,94)	.115	(2,92)	1-7/16	(36,53)
13SP360	SP 360	5/16	(7,94)	.140	(3,56)	1-7/16	(36,53)
13SP361	SP 361	5/16	(7,94)	.171	(4,34)	1-7/16	(36,53)
13SP362	SP 362	5/16	(7,94)	.194	(4,93)	1-7/16	(36,53)
13SP363	SP 363	5/16	(7,94)	.115	(2,92)	1-1/2	(38,10)
13SP364	SP 364	5/16	(7,94)	.140	(3,56)	1-1/2	(38,10)
13SP365	SP 365	5/16	(7,94)	.171	(4,34)	1-1/2	(38,10)
13SP366	SP 366	5/16	(7,94)	.194	(4,93)	1-1/2	(38,10)
13SP372	SP 372	3/8	(9,53)	.140	(3,56)	1-1/16	(27,00)
13SP373	SP 373	3/8	(9,53)	.171	(4,34)	1-1/16	(27,00)
13SP374	SP 374	3/8	(9,53)	.194	(4,93)	1-1/16	(27,00)
13SP375	SP 375	3/8	(9,53)	.140	(3,56)	1-1/8	(28,58)
13SP376	SP 376	3/8	(9,53)	.171	(4,34)	1-1/8	(28,58)
13SP377	SP 377	3/8	(9,53)	.194	(4,93)	1-1/8	(28,58)
13SP378	SP 378	3/8	(9,53)	.140	(3,56)	1-3/16	(30,18)
13SP379	SP 379	3/8	(9,53)	.171	(4,34)	1-3/16	(30,18)
13SP380	SP 380	3/8	(9,53)	.194	(4,93)	1-3/16	(30,18)
13SP381	SP 381	3/8	(9,53)	.140	(3,56)	1-1/4	(31,75)
13SP382	SP 382	3/8	(9,53)	.171	(4,34)	1-1/4	(31,75)
13SP383	SP 383	3/8	(9,53)	.194	(4,93)	1-1/4	(31,75)
13SP384	SP 384	3/8	(9,53)	.140	(3,56)	1-5/16	(33,35)
13SP385	SP 385	3/8	(9,53)	.171	(4,34)	1-5/16	(33,35)
13SP386	SP 386	3/8	(9,53)	.194	(4,93)	1-5/16	(33,35)
13SP387	SP 387	3/8	(9,53)	.140	(3,56)	1-3/8	(34,93)
13SP388	SP 388	3/8	(9,53)	.171	(4,34)	1-3/8	(34,93)
13SP389	SP 389	3/8	(9,53)	.194	(4,93)	1-3/8	(34,93)
13SP390	SP 390	3/8	(9,53)	.140	(3,56)	1-7/16	(36,53)
13SP391	SP 391	3/8	(9,53)	.171	(4,34)	1-7/16	(36,53)
13SP392	SP 392	3/8	(9,53)	.194	(4,93)	1-7/16	(36,53)
13SP393	SP 393	3/8	(9,53)	.140	(3,56)	1-1/2	(38,10)
13SP394	SP 394	3/8	(9,53)	.171	(4,34)	1-1/2	(38,10)
13SP395	SP 395	3/8	(9,53)	.194	(4,93)	1-1/2	(38,10)

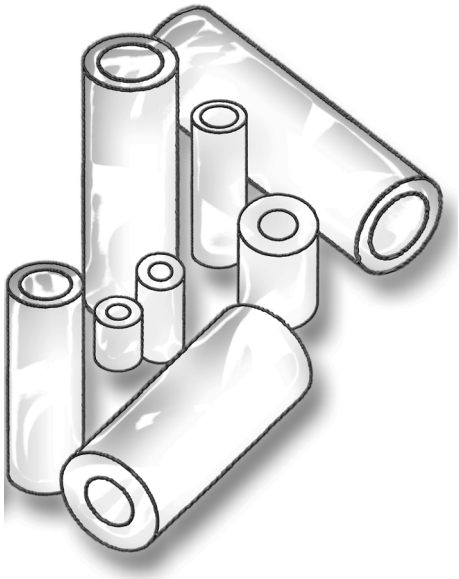

SECTION V

SPACERS ARE NOT STOCKED - They are molded to your order requirements - NO SAMPLES AVAILABLE.

- Order quantites are subject to - 10% + 20% variation.
- Tolerances OD +/-.015 - ID +/-.005 - LENGTH +/-.005
- Available in natural Nylon 66 only.
- Parts can be dyed Black at no additional cost, dyed parts may be out of tolerance.
- Minimum order quanity 1000 pieces.

O.D. - I.D. COMBINATIONS AVAILABLE

LENGTHS AVAILABLE 0.125 THRU 1.000 +/-.005 IN .001 INCH INCREMENTS

LAST 4 DIGITS OF PART NUMBER

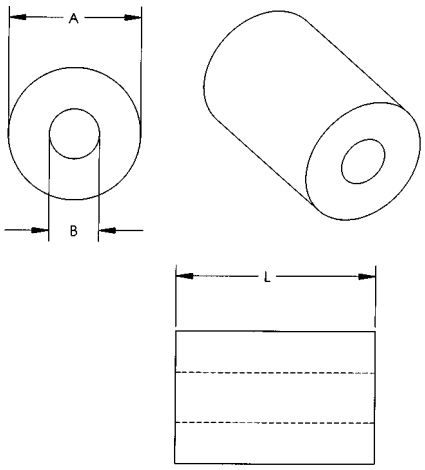

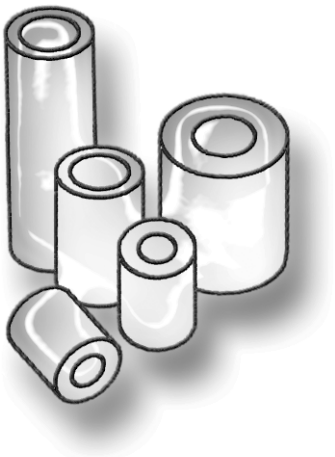

Micro Plastics' length to specification spacers are molded in corrosion resistant, electrical insulating Nylon 6/6.

Available in standard O.D. -- I.D. combinations to your specified length. -- Length specified in .001 increments +/-.005

LENGTH TO SPECIFICATION SPACERS

ITEM NUMBER	A		B	
3/16 O.D. SPACERS				
13LTS188091 __ __ __ __	3/16	(4,76)	.091	(2,31)
13LTS188115 __ __ __ __	3/16	(4,76)	.115	(2,92)
1/4 O.D. SPACERS				
13LTS250091 __ __ __ __	1/4	(6,35)	.091	(2,31)
13LTS250115 __ __ __ __	1/4	(6,35)	.115	(2,92)
13LTS250140 __ __ __ __	1/4	(6,35)	.140	(3,56)
13LTS250171 __ __ __ __	1/4	(6,35)	.171	(4,34)
5/16 O.D. SPACERS				
13LTS312115 __ __ __ __	5/16	(7,94)	.115	(2,92)
13LTS312140 __ __ __ __	5/16	(7,94)	.140	(3,56)
13LTS312171 __ __ __ __	5/16	(7,94)	.171	(4,34)
13LTS312194 __ __ __ __	5/16	(7,94)	.194	(4,67)
3/8 O.D. SPACERS				
13LTS375140 __ __ __ __	3/8	(9,53)	.140	(3,56)
13LTS375171 __ __ __ __	3/8	(9,53)	.171	(4,34)
13LTS375194 __ __ __ __	3/8	(9,53)	.194	(4,67)
1/2 O.D. SPACERS				
13LTS500140 __ __ __ __	1/2	(12,70)	.140	(3,56)
13LTS500171 __ __ __ __	1/2	(12,70)	.171	(4,34)
13LTS500194 __ __ __ __	1/2	(12,70)	.194	(4,67)
13LTS500219 __ __ __ __	1/2	(12,70)	.219	(5,56)
13LTS500257 __ __ __ __	1/2	(12,70)	.257	(6,53)

To order this item, add the desired length to the last four digits of the item number.

PART NUMBER EXAMPLE **1/4 O.D. X .140 I.D. X 3/4 LONG**

13LTS 250 140 0750

- 0750 — LENGTH
- 140 — ID
- 250 — OD
- 13LTS — SPECIFIES LENGTH TO ORDER SPACER

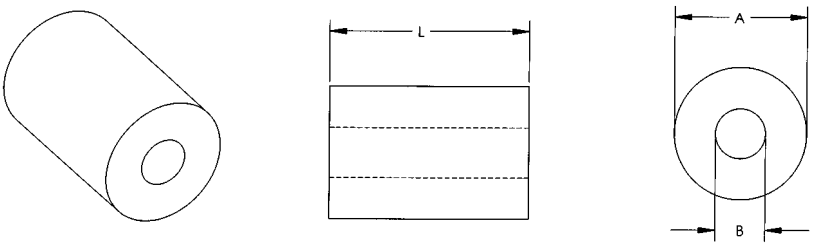

New Sizes

SPECIAL NYLON SPACERS

ITEM NUMBER	DESCRIPTION	A		B		L	
13RS012504	RS 12504	.125	(3,18)	.047	(1,19)	3/8	(9,53)
13RS014528	RS 14528	.148	(3,76)	.085	(2,16)	.280	(7,11)
13RS014529	RS 14529	.125	(3,18)	.047	(1,19)	.187	(4,75)
13RS014530	RS 14530	.150	(3,81)	.078	(1,98)	5/16	(7,94)
13RS014531	RS 14531	.138	(3,50)	.038	(0,97)	.125	(3,17)
13RS014532	RS 14532	.156	(3,96)	.063	(1,60)	.120	3,05)
13RS014533	RS 14533	.138	(3,51)	.038	(0,97)	.065	(1,65)
13RS014534	RS 14534	.125	(3,18)	.069	(1,75)	.203	(5,16)
13RS015721	RS 15721	.157	(3,99)	.102	(2,59)	.217	(5,51)
13RS016040	RS 16040	.160	(4,06)	.100	(2,54)	13/32	(10,32)
13RS018020	RS 18020	.192	(4,89)	.093	(2,36)	13/64	(5,16)
13RS018713	RS 18713	.188	(4,77)	.091	(2,31)	.275	(6,99)
13RS018714	RS 18714	.188	(4,77)	.09	(2,29)	.52	(13,21)
13RS018715	RS 18715	.187	(4,75)	.067	(1,70)	9/64	(3,58)
13RS018716	RS 18716	.187	(4,75)	.064	(1,63)	.187	(4,75)
13RS018720	RS 18720	.187	(4,75)	.096	(2,44)	5/32	(3,97)
13RS018721	RS 18721	.187	(4,75)	.063	(1,60)	.200	(5,08)
13RS018722	RS 18722	3/16	(4,76)	.115	(2,92)	9/32	(7,14)
13RS018725	RS 18725	.187	(4,75)	.120	(3,05)	5/16	(7,94)
13RS018726	RS 18726	.187	(4,75)	.135	(3,43)	1/4	(6,35)
13RS018727	RS 18727	.197	(5,00)	.118	(3,00)	.108	(2,74)
13RS018730	RS 18730	.187	(4,75)	.120	(3,05)	11/32	(8,71)
13RS018735	RS 18735	.187	(4,75)	.120	(3,05)	7/16	(11,11)
13RS018785	RS 18785	.187	(4,75)	.091	(2,31)	27/32	(21,41)
13RS018790	RS 18790	.187	(4,75)	.091	(2,31)	13/64	(13,87)
13RS019330	RS 19330	.193	(4,90)	.125	(3,18)	1/4	(6,35)
13RS020030	RS 20030	.200	(5,08)	.145	(3,68)	11/64	(4,37)
13RS020031	RS 20031	.200	(5,08)	.145	(3,68)	.110	(2,79)
13RS020032	RS 20032	.198	(5,03)	.109	(2,77)	.345	(8,76)
13RS020313	RS 20313	.203	(5,16)	.130	(3,30)	9/32	(7,14)
13RS021025	RS 21025	.210	(5,33)	.156	(3,96)	.250	(6,35)
13RS021337	RS 21337	.218	(5,54)	.125	(3,18)	.385	(9,78)
13RS021535	RS 21535	.215	(5,46)	.145	(3,68)	21/64	(8,33)
13RS021830	RS 21830	.218	(5,54)	.140	(3,56)	5/32	(3,97)
13RS022013	RS 22013	.220	(5,59)	.138	(3,50)	21/32	(16,66)
13RS024014	RS 24014	.245	(6,22)	.175	(4,45)	5/32	(3,97)
13RS024015	RS 24015	.245	(6,22)	.175	(4,45)	.166	(4,22)
13RS025009	RS 25009	.250	(6,35)	.195	(4,95)	.195	(4,95)
13RS025010	RS 25010	.250	(6,35)	.153	(3,89)	.250	(6,35)
13RS025011	RS 25011	.250	(6,35)	.171	(4,34)	.413	(10,49)
13RS025012	RS 25012	.250	(6,35)	.126	(3,20)	51/64	(20,22)

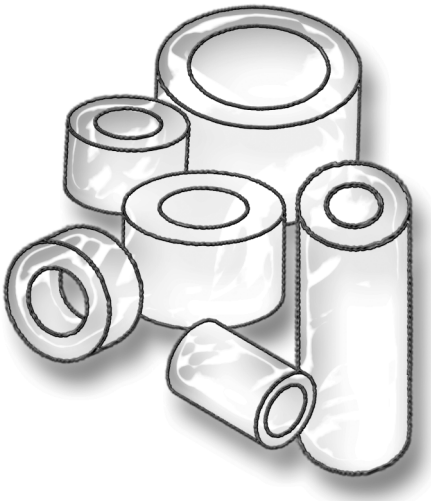

SECTION
V

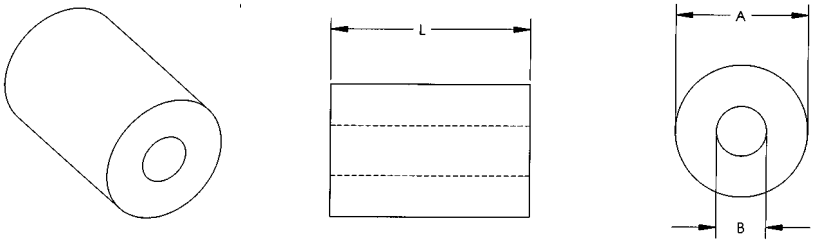

New Sizes

SPECIAL NYLON SPACERS

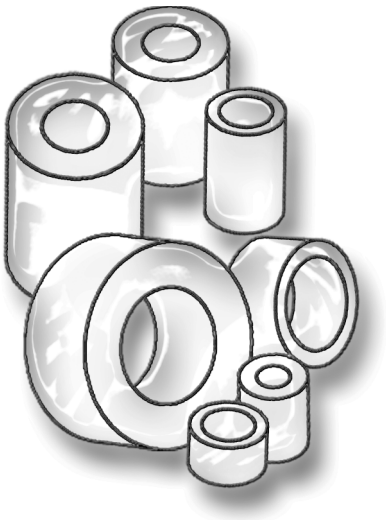

ITEM NUMBER	DESCRIPTION	A		B		L	
13RS025013	RS 25013	.250	(6,35)	.171	(4,34)	.355	(9,02)
13RS025014	RS 25014	.250	(6,35)	.125	(3,18)	.823	(20,90)
13RS025015	RS 25015	.250	(6,35)	.166	(4,22)	1/2	(12,70)
13RS025016	RS 25016	.250	(6,35)	.188	(4,78)	.188	(4,78)
13RS025017	RS 25017	.254	(6,45)	.150	(3,81)	.166	(4,26)
13RS025018	RS 25018	.250	(6,35)	.171	(4,34)	.575	(14,61)
13RS025019	RS 25019	.250	(6,35)	.171	(4,34)	.475	(12,07)
13RS025020	RS 25020	.250	(6,35)	.205	(5,21)	.230	(5,84)
13RS025021	RS 25021	.250	(6,35)	.125	(3,18)	.375	(9,53)
13RS025041	RS 25041	.250	(6,35)	.120	(3,05)	.389	(9,88)
13RS025042	RS 25042	.250	(6,35)	.125	(3,18)	.420	(10,67)
13RS025048	RS 25048	.250	(6,35)	.115	(2,92)	7/32	(5,55)
13RS025050	RS 25050	.250	(6,35)	.147	(3,73)	19/64	(7,52)
13RS025053	RS 25053	.250	(6,35)	.140	(3,56)	17/32	(13,49)
13RS025055	RS 25055	.250	(6,35)	.140	(3,56)	35/64	(13,87)
13RS025056	RS 25056	.250	(6,35)	.140	(3,56)	.640	(16,26)
13RS025057	RS 25057	.250	(6,35)	.171	(4,34)	.375	(9,53)
13RS025058	RS 25058	.250	(6,35)	.140	(3,56)	.220	(5,59)
13RS025062	RS 25062	.260	(6,60)	.200	(5,08)	19/32	(15,08)
13RS025065	RS 25065	.250	(6,35)	.160	(4,06)	.750	(19,05)
13RS025070	RS 25070	.250	(6,35)	.141	(3,58)	9/32	(7,14)
13RS025075	RS 25075	.250	(6,35)	.115	(2,92)	.207	(5,26)
13RS025090	RS 25090	.250	(6,35)	.115	(2,92)	1-5/16	(33,32)
13RS025091	RS 25091	.251	(6,38)	.152	(3,86)	5/32	(3,97)
13RS025095	RS 25095	.251	(6,38)	.115	(2,92)	17/32	(13,49)
13RS027540	RS 27540	.275	(6,99)	.195	(4,95)	.40	(10,16)
13RS027541	RS 27541	.275	(6,99)	.185	(4,70)	.090	(2,29)
13RS028030	RS 28030	.280	(7,11)	.170	(4,32)	.300	(7,62)
13RS028038	RS 28038	.280	(7,11)	.125	(3,18)	19/64	(7,54)
13RS028440	RS 28440	.284	(7,21)	.224	(5,69)	.400	(10,16)
13RS029618	RS 29618	.296	(7,52)	.125	(3,18)	3/32	(2,38)
13RS031210	RS 31210	.312	(7,93)	.095	(2,41)	1/4	(6,35)
13RS030500	RS 30500	.305	(7,75)	.260	(6,60)	.179	(4,55)
13RS031211	RS 31211	.312	(7,93)	.194	(4,93)	1.405	(35,68)
13RS031212	RS 31212	.312	(7,93)	.194	(4,93)	.530	(13,46)
13RS031213	RS 31213	.312	(7,93)	.205	(5,21)	.160	(4,06)
13RS031214	RS 31214	.312	(7,93)	.140	(3,56)	9/32	(7,14)
13RS031221	RS 31221	.312	(7,93)	.195	(4,95)	.214	(5,44)
13RS031225	RS 31225	.312	(7,93)	.156	(3,96)	.256	(6,50)
13RS031226	RS 31226	5/16	(7,94)	.228	(5,79)	.260	(6,60)
13RS031230	RS 31230	.312	(7,93)	.246	(6,25)	1/4	(6,35)

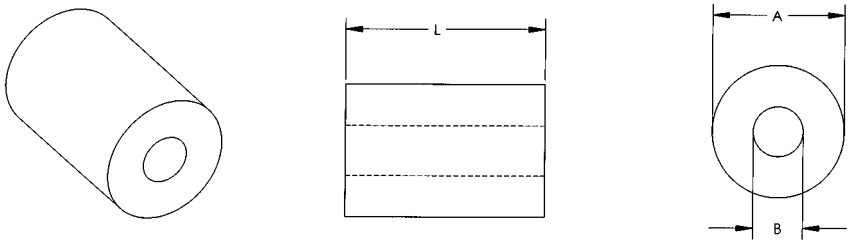

New Sizes

SPECIAL NYLON SPACERS

ITEM NUMBER	DESCRIPTION	A		B		L	
13RS031243	RS 31243	5/16	(7,94)	.171	(4,34)	2-7/16	(61,93)
13RS031244	RS 31244	.312	(7,93)	.194	(4,93)	1.155	(29,33)
13RS031245	RS 31245	.312	(7,93)	.195	(4,95)	.355	(9,02)
13RS031246	RS 31246	.312	(7,93)	.140	(3,56)	.200	(5,08)
13RS031247	RS 31247	5/16	(7,94)	7/32	(5,54)	13/16	(20,64)
13RS031250	RS 31250	.312	(7,93)	.246	(6,25)	.495	(12,57
13RS031251	RS 31251	.312	(7,93)	.171	(4,34)	1-7/8	(47,63)
13RS031252	RS 31252	.480	(12,19)	.345	(8,76)	3/16	(4,75)
13RS031253	RS 31253	.313	(7,95)	.187	(4,75)	.171	(4,34)
13RS031254	RS 31254	5/16	(7,94)	.171	(4,34)	.671	(17,04)
13RS031255	RS 31255	.320	(8,13)	.215	(5,46)	.220	(5,59)
13RS031256	RS 31256	.325	(8,26)	.125	(3,18)	.360	(9,14)
13RS031257	RS 31257	5/16	(7,94)	.175	(4,45)	.154	(3,91)
13RS031258	RS 31258	.312	(7,93)	.225	(5,72)	7/16	(11,11)
13RS031339	RS 31339	.313	(7,95)	.195	(4,95)	.385	(9,78)
13RS031640	RS 31640	.316	(8,03)	.188	(4,78)	13/64	(5,16)
13RS031641	RS 31641	.250	(6,35)	.120	(3,05)	.200	(5,08)
13RS031830	RS 31830	.313	(7,95)	.189	(4,80)	*9/64	(7,54)
13RS034001	RS 34001	.340	(8,64)	.280	(7,11)	.310	(7,87)
13RS034002	RS 34002	11/32	(8,74)	.198	(5,03)	.281	(7,14)
13RS034003	RS 34003	.340	(8,64)	.280	(7,11)	1/2	(12,70)
13RS034004	RS 34004	.355	(9,02)	.255	(6,48)	.130	(3,30)
13RS035453	RS 35453	.354	(8,99)	.172	(4,37)	.531	(13,49)
13RS036031	RS 36031	.360	(9,14)	.316	(8,03)	1/4	(6,35)
13RS036032	RS 36032	.360	(9,14)	.252	(6,40)	.425	(10,80)
13RS037030	RS 37030	.370	(9,40)	.265	(6,73)	5/32	(3,96)
13RS037031	RS 37031	.375	(9,53)	.254	(6,45)	.453	(11,51)
13RS037032	RS 37032	.372	(9,53)	.288	(7,32)	.969	(24,61)
13RS037033	RS 37033	3/8	(9,45)	.315	(8,00)	.162	(4,11)
13RS037041	RS 37041	.370	(9,40)	.194	(4,93)	.418	(10,62)
13RS037441	RS 37441	.374	(9,53)	.248	(6,30)	13/32	(10,32)
13RS037513	RS 37513	.375	(9,53)	.194	(4,93)	.340	(8,64)
13RS037514	RS 37514	.376	(9,55)	.175	(4,45)	.150	(3,81)
13RS037515	RS 37515	.375	(9,53)	.219	(5,56)	5/32	(3,96)
13RS037516	RS 37516	.375	(9,53)	.252	(6,40)	.820	(20,83)
13RS037517	RS 37517	.375	(9,53)	.219	(5,56)	11/64	(4,36)
13RS037518	RS 37518	.375	(9,53)	.252	(6,40)	3/16	(4,75)
13RS037520	RS 37520	.375	(9,53)	.219	(5,56)	13/64	(5,16)
13RS037521	RS 37521	.375	(9,53)	.218	(5,54)	7/16	(11,11)
13RS037522	RS 37522	.375	(9,53)	.220	(5,59)	3/8	(9,53)
13RS037523	RS 37523	3/8	(9,53)	.257	(6,53)	1/4	(6,35)

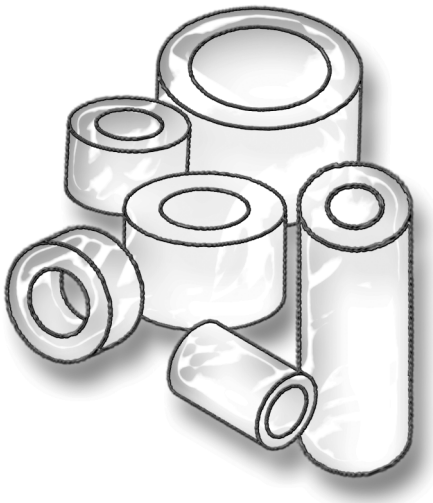

* L Dimension +/-.015

SECTION V

SPECIAL NYLON SPACERS

New Sizes

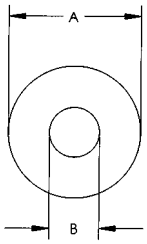

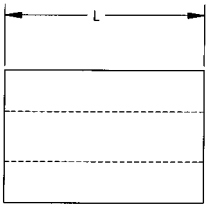

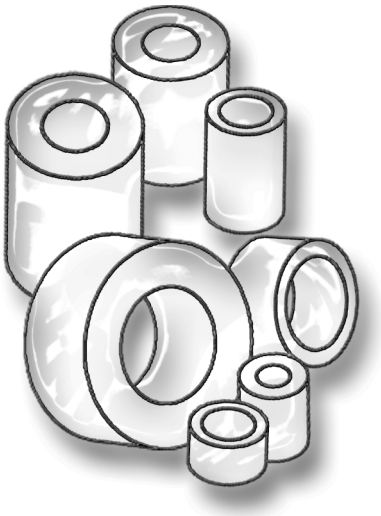

ITEM NUMBER	DESCRIPTION	A		B		L	
13RS037525	RS 37525	.375	(9,53)	.225	(5,72)	.250	(6,35)
13RS037534	RS 37534	.375	(9,53)	.140	(3,56)	11/32	(8,73)
13RS037536	RS 37536	.375	(9,53)	.255	(6,48)	.330	(8,38)
13RS037538	RS 37538	.375	(9,53)	.255	(6,48)	.380	(9,65)
13RS037542	RS 37542	.375	(9,53)	.265	(6,73)	1/4	(6,35)
13RS037546	RS 37546	.375	(9,53)	.094	(2,39)	9/32	(7,14)
13RS037547	RS 37547	.375	(9,53)	.203	(5,16)	17/64	(6,74)
13RS037548	RS 37548	.375	(9,53)	.203	(5,16)	7/64	(2,78)
13RS037550	RS 37550	.375	(9,53)	.252	(6,40)	3/8	(9,53)
13RS037552	RS 37552	.375	(9,53)	.265	(6,73)	3/8	(9,53)
13RS037559	RS 37559	.375	(9,53)	.250	(6,35)	.593	(15,06)
13RS037565	RS 37565	.375	(9,53)	.265	(6,73)	1/2	(12,70)
13RS037570	RS 37570	.375	(9,53)	.140	(3,56)	.700	(17,78)
13RS037571	RS 37571	.375	(9,53)	.255	(6,48)	.700	(17,78)
13RS037575	RS 37575	.375	(9,53)	.265	(6,73)	7/8	(22,22)
13RS037580	RS 37580	.375	(9,53)	.265	(6,73)	1	(25,40)
13RS037585	RS 37585	.375	(9,53)	.257	(6,53)	1-1/4	(31,75)
13RS037590	RS 37590	.375	(9,53)	.265	(6,73)	3/4	(19,05)
13RS037591	RS 37591	.375	(9,53)	.140	(3,56)	.725	(18,42)
13RS037598	RS 37598	.375	(9,53)	.115	(2,92)	1-1/16	(27,00)
13RS037599	RS 37599	.375	(9,53)	.230	(5,84)	.925	(23,50)
13RS038037	RS 38037	.380	(9,65)	.250	(6,35)	.440	(11,18)
13RS038038	RS 38038	.380	(9,65)	.320	(8,13)	.382	(9,70)
13RS038039	RS 38039	.385	(9,78)	.254	(6,45)	.240	(6,10)
13RS038518	RS 38518	5/8	(15,88)	.385	(9,78)	.187	(4,75)
13RS038930	RS 38930	.389	(9,88)	.251	(6,38)	1/8	(3,18)
13RS039315	RS 39315	.393	(9,98)	.151	(3,83)	1/4	(6,35)
13RS039342	RS 39342	.393	(9,98)	.169	(4,29)	15/64	(5,94)
13RS039459	RS 39459	.395	(10,03)	.320	(8,13)	.591	(15,01)
13RS040080	RS 40080	.400	(10,16)	.140	(3,56)	23/32	(18,25)
13RS040082	RS 40082	.430	(10,92)	.285	(7,24)	.400	(10,16)
13RS040085	RS 40085	.400	(10,16)	.140	(3,56)	25/32	(19,84)
13RS040630	RS 40630	.406	(10,31)	.269	(6,83)	1/4	(6,35)
13RS040636	RS 40636	.406	(10,31)	.265	(6,73)	.562	(14,27)
13RS040637	RS 40637	.406	(10,31)	.265	(6,73)	.625	(15,88)
13RS040660	RS 40660	.406	(10,31)	.267	(6,78)	1/2	(12,70)
13RS040670	RS 40670	.406	(10,31)	.265	(6,73)	3/4	(19,05)
13RS040671	RS 40671	.406	(10,31)	.311	(7,90)	.591	(15,01)
13RS040675	RS 40675	.406	(10,31)	.280	(7,11)	3/8	(9,53)
13RS040685	RS 40685	.406	(10,31)	.265	(6,73)	1	(25,40)
13RS041500	RS 41500	.415	(10,54)	.320	(8,13)	.640	(16,26)
13RS042700	RS 42700	.427	(10,85)	.182	(4,62)	47/64	(18,64)
13RS042701	RS 42701	.433	(10,10)	.256	(6,50)	.220	(5,59)
13RS043724	RS 43724	7/16	(11,11)	1/4	(6,35)	3.94	(10,01)
13RS043725	RS 43725	7/16	(11,11)	1/4	(6,35)	.591	(15,01)
13RS043726	RS 43726	.437	(11,10)	.312	(7,92)	.350	(8,89)
13RS043727	RS 43727	.438	(11,13)	.325	(8,26)	.422	(10,72)
13RS043728	RS 43728	.437	(11,10)	.318	(8,08)	.281	(7,14)
13RS043729	RS 43729	7/16	(11,11)	.171	(4,34)	.655	(16,64)
13RS043730	RS 43730	.437	(11,10)	.318	(8,08)	.150	(3,81)
13RS045040	RS 45040	.450	(11,43)	.325	(8,26)	27/64	(10,72)

SPECIAL NYLON SPACERS

ITEM NUMBER	DESCRIPTION	A		B		L	
13RS046060	RS 46060	.460	(11,68)	.252	(6,40)	9/16	(14,29)
13RS046061	RS 46061	.460	(11,68)	.400	(10,16)	.440	(11,18)
13RS046319	RS 46319	.463	(11,76)	.190	(4,83)	5/16	(7,92)
13RS046500	RS 46500	.465	(11,81)	.382	(9,70)	.282	(7,16)
13RS046823	RS 46823	.468	(11,89)	.314	(7,98)	.230	(5,84)
13RS048012	RS 48012	.470	(11,94)	.120	(3,05)	23/64	(9,12)
13RS048013	RS 48013	.472	(11,99)	.394	(10,01)	.787	(19,99)
13RS048015	RS 48015	.475	(12,06)	.191	(4,85)	21/64	(8,33)
13RS048016	RS 48016	.480	(12,19)	.257	(6,53)	3/16	(4,76)
13RS048420	RS 48420	.484	(12,29)	.343	(8,71)	3/16	(4,76)
13RS048421	RS 48421	.486	(12,34)	.320	(8,13)	.375	(9,53)
13RS050009	RS 50009	.500	(12,70)	.219	(5,56)	.649	(16,48)
13RS050010	RS 50010	.500	(12,70)	.320	(8,13)	.270	(6,86)
13RS050011	RS 50011	.500	(12,70)	.244	(6,20)	.295	(7,49)
13RS050014	RS 50014	.501	(12,72)	.249	(6,32)	.390	(9,91)
13RS050015	RS 50015	.500	(12,70)	.194	(4,93)	13/32	(10,31)
13RS050016	RS 50016	.500	(12,70)	.265	(6,73)	.156	(3,96)
13RS050017	RS 50017	.500	(12,70)	.265	(6,73)	.200	(5,08)
13RS050018	RS 50018	1/2	(12,70)	.257	(6,53)	15/64	(5,94)
13RS050019	RS 50019	.500	(12,70)	.195	(4,95)	.451	(13,74)
13RS050020	RS 50020	.500	(12,70)	.213	(5,41)	.250	(6,35)
13RS050021	RS 50021	1/2	(12,70)	.382	(9,70)	.625	(15,88)
13RS050022	RS 50022	.500	(12,70)	.260	(6,60)	1/4	(6,35)
13RS050023	RS 50023	.500	(12,70)	.281	(7,14)	13/16	(20,64)
13RS050024	RS 50024	.500	(12,70)	.220	(5,59)	.135	(3,43)
13RS050025	RS 50025	.500	(12,70)	.170	(4,32)	.255	(6,48)
13RS050027	RS 50027	.500	(12,70)	.170	(4,32)	.270	(6,86)
13RS050028	RS 50028	.500	(12,70)	.312	(7,93)	5/32	(3,97)
13RS050031	RS 50031	.500	(12,70)	.382	(9,70)	.312	(7,92)
13RS050040	RS 50040	.500	(12,70)	.344	(8,74)	13/16	(20,64)
13RS050041	RS 50041	.500	(12,70)	.375	(9,53)	.225	(5,72)
13RS050045	RS 50045	.500	(12,70)	.257	(6,53)	13/32	(10,31)
13RS050046	RS 50046	1/2	(12,70)	.312	(7,93)	1-5/16	(33,33)
13RS050047	RS 50047	.500	(12,70)	.368	(9,34)	.470	(11,94)
13RS050050	RS 50050	.500	(12,70)	.328	(8,33)	1	(25,40)
13RS050055	RS 50055	.500	(12,70)	.383	(9,73)	1/2	(12,70)
13RS050060	RS 50060	.490	(12,47)	.257	(6,53)	3/8	(9,53)
13RS050061	RS 50061	.500	(12,70)	.335	(8,51)	.209	(5,31)
13RS050062	RS 50062	.505	(12,83)	.385	(9,78)	5/32	(3,97)
13RS050063	RS 50063	.500	(12,70)	.285	(7,24)	.630	(16,00)
13RS050064	RS 50064	.683	(17,35)	.505	(12,83)	.500	(12,70)
13RS050065	RS 50065	.500	(12,70)	.395	(10,03)	.314	(7,98)
13RS050070	RS 50070	.500	(12,70)	.316	(8,03)	1/2	(12,70)
13RS050071	RS 50071	.500	(12,70)	.316	(8,03)	15/64	(5,95)
13RS050080	RS 50080	.500	(12,70)	.380	(9,65)	27/64	(10,72)
13RS050082	RS 50082	.500	(12,70)	.375	(9,53)	7/16	(11,11)
13RS050085	RS 50085	.500	(12,70)	.281	(7,14)	3/8	(9,53)
13RS050088	RS 50088	.500	(12,70)	.260	(6,60)	1-5/8	(41,28)
13RS050089	RS 50089	.500	(12,70)	.375	(9,53)	.380	(9,65)
13RS050090	RS 50090	.500	(12,70)	.375	(9,53)	5/8	(15,88)
13RS050091	RS 50091	.500	(12,70)	.375	(9,53)	.635	(16,13)

New Sizes

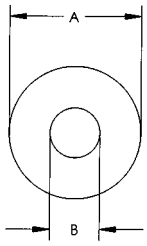

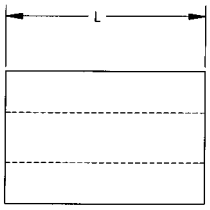

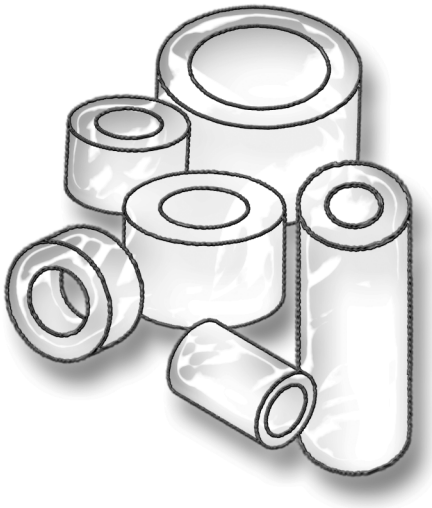

SECTION V

SPECIAL NYLON SPACERS

New Sizes

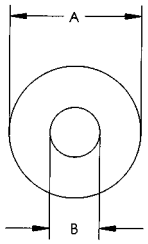

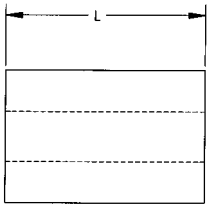

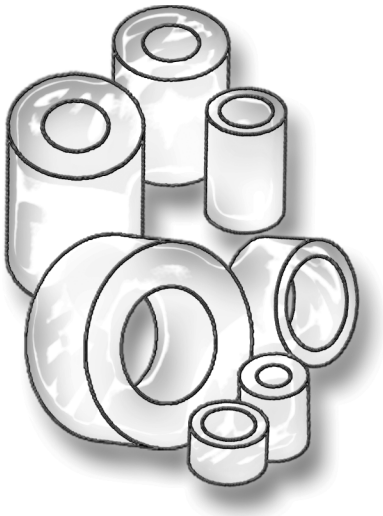

ITEM NUMBER	DESCRIPTION	A		B		L	
13RS050093	RS 50093	.500	(12,70)	.285	(7,24)	.930	(23,62)
13RS050094	RS 50094	.500	(12,70)	.375	(9,53)	11/16	(17,46)
13RS050095	RS 50095	.500	(12,70)	.385	(9,78)	1	(25,40)
13RS050096	RS 50096	.500	(12,70)	.260	(6,60)	1-3/8	(34,93)
13RS050097	RS 50097	.515	(13,08)	.445	(11,30)	.380	(9,65)
13RS050099	RS 50099	1/2	(12,70)	.250	(6,35)	2.125	(53,98)
13RS051001	RS 51001	.510	(12,95)	.390	(9,91)	1/4	(6,35)
13RS051062	RS 51062	.510	(12,95)	.320	(8,13)	7/8	(22,22)
13RS052001	RS 52001	.518	(13,16)	.382	(9,70)	.280	(7,11)
13RS052002	RS 52002	.533	(13,54)	.219	(5,56)	.360	(9,14)
13RS053546	RS 53546	.535	(13,59)	.250	(6,35)	.610	(15,49)
13RS056030	RS 56030	.560	(14,22)	.379	(9,63)	3/8	(9,53)
13RS056031	RS 56031	.562	(14,27)	.375	(9,53)	1/2	(12,70)
13RS056032	RS 56032	.563	(14,30)	.453	(11,51)	.281	(7,14)
13RS056033	RS 56033	.560	(14,22)	.280	(7,11)	.500	(12,70)
13RS056256	RS 56256	.555	(13,97)	.245	(6,22)	9/16	(14,29)
13RS056337	RS 56337	.563	(14,30)	.281	(7,14)	3/8	(9,53)
13RS056656	RS 56656	.565	(14,35)	.33	(8,38)	.56	(14,22)
13RS056718	RS 56718	.567	(14,40)	.318	(8,08)	35/64	(13,87)
13RS056740	RS 56740	.567	(14,40)	.437	(11,10)	.406	(10,31)
13RS057032	RS 57032	.570	(14,48)	.320	(8,13)	35/64	(13,87)
13RS057033	RS 57033	.589	(14,96)	.312	(7,92)	.310	(7,87)
13RS059031	RS 59031	.590	(14,99)	.314	(7,98)	23/64	(9,12)
13RS059032	RS 59032	.590	(14,99)	.319	(8,10)	.655	(16,64)
13RS060550	RS 60550	.606	(15,39)	.203	(5,16)	5/8	(15,88)
13RS060551	RS 60551	.602	(15,29)	.250	(6,35)	.622	(15,80)
13RS061018	RS 61018	.615	(15,62)	.385	(9,78)	3/16	(4,76)
13RS061019	RS 61019	.615	(15,62)	.325	(8,26)	.813	(20,65)
13RS061020	RS 61020	.615	(15,62)	.328	(8,33)	.438	(11,13)
13RS061731	RS 61731	.617	(15,67)	.313	(7,95)	11/16	(17,46)
13RS062012	RS 62012	.620	(15,75)	.350	(8,89)	3/16	(4,76)
13RS062035	RS 62035	.620	(15,75)	.507	(12,89)	1-11/16	(42,85)
13RS062040	RS 62040	.620	(15,75)	.504	(12,80)	13/16	(20,64)
13RS062062	RS 62062	.620	(15,75)	.504	(12,80)	.625	(15,88)
13RS062331	RS 62331	.623	(15,82)	.311	(7,90)	13/16	(20,64)
13RS062514	RS 62514	.625	(15,88)	.160	(4,06)	.312	(7,92)
13RS062515	RS 62515	.620	(15,75)	.323	(8,20)	5/32	(3,96)
13RS062516	RS 62516	5/8	(15,88)	.312	(7,92)	3/4	(19,05)
13RS062517	RS 62517	.621	(15,77)	.254	(6,45)	.652	(16,56)
13RS062519	RS 62519	.625	(15,88)	.191	(4,85)	1/4	(6,35)
13RS062520	RS 62520	.63	(16,00)	.50	(12,70)	1-1/4	(31,75)
13RS062521	RS 62521	.625	(15,88)	.140	(3,56)	.375	(9,53)
13RS062522	RS 62522	.625	(15,88)	.435	(11,10)	1/4	(6,35)
13RS062523	RS 62523	.635	(16,13)	.385	(9,78)	.230	(5,84)
13RS062524	RS 62524	.625	(15,88)	.412	(10,46)	.155	(3,94)
13RS062525	RS 62525	.625	(15,88)	.390	(9,91)	1/4	(6,35)
13RS062526	RS 62526	.625	(15,88)	.380	(9,65)	.750	(19,05)
13RS062527	RS 62527	.625	(15,88)	.328	(8,33)	.250	(6,35)
13RS062528	RS 62528	.625	(15,88)	.280	(7,11)	7/16	(11,10)
13RS062530	RS 62530	.610	(15,49)	.250	(6,35)	3/8	(9,53)
13RS062531	RS 62531	.625	(15,88)	.260	(6,60)	1/4	(6,35)

SPECIAL NYLON SPACERS

ITEM NUMBER	DESCRIPTION	A		B		L	
13RS062535	RS 62535	.625	(15,88)	.500	(12,70)	5/16	(7,94)
13RS062537	RS 62537	.625	(15,88)	.342	(8,69)	3/8	(9,53)
13RS062538	RS 62538	.627	(15,93)	.484	(12,29)	.467	(11,86)
13RS062540	RS 62540	.625	(15,88)	.375	(9,53)	3/8	(9,53)
13RS062541	RS 62541	.625	(15,88)	.312	(7,92)	.500	(12,70)
13RS062546	RS 62546	.625	(15,88)	.375	(9,53)	.462	(11,73)
13RS062547	RS 62547	.625	(15,88)	.315	(8,00)	.312	(7,92)
13RS062550	RS 62550	.613	(15,57)	.281	(7,14)	1/2	(12,70)
13RS062560	RS 62560	.615	(15,62)	.281	(7,14)	13/16	(20,64)
13RS062561	RS 62561	.625	(15,88)	.386	(9,80)	5/8	(15,88)
13RS062565	RS 62565	.625	(15,88)	.450	(11,43)	5/8	(15,88)
13RS062570	RS 62570	.635	(16,13)	.425	(10,80)	7/8	(22,22)
13RS062571	RS 62571	.625	(15,88)	.450	(11,43)	7/8	(22,22)
13RS062572	RS 62572	.618	(15,70)	.500	(12,70)	31/64	(12,29)
13RS062573	RS 62573	.625	(15,88)	.386	(9,80)	.738	(18,75)
13RS062575	RS 62575	.625	(15,88)	.500	(12,70)	1.000	(25,40)
13RS062580	RS 62580	.625	(15,88)	.257	(6,53)	1/8	(3,18)
13RS062582	RS 62582	.625	(15,88)	.375	(9,53)	.082	(2,08)
13RS062583	RS 62583	.634	(16,10)	.434	(11,02)	.380	(9,65)
13RS062584	RS 62584	5/8	(15,88)	.380	(9,65)	1 1/4	(31,75)
13RS062591	RS 62591	.630	(16,00)	.350	(8,89)	.200	(5,08)
13RS062650	RS 62650	.620	(15,75)	.507	(12,89)	1/2	(12,70)
13RS063050	RS 63050	.630	(16,00)	.378	(9,60)	.50	(12,70)
13RS063550	RS 63550	.635	(16,13)	.520	(13,21)	.500	(12,70)
13RS063564	RS 63564	.913	(23,19)	.635	(16,13)	.641	(16,28)
13RS064057	RS 64057	.640	(16,26)	.327	(8,31)	.560	(14,22)
13RS065650	RS 65650	.656	(16,66)	.516	(13,11)	1/2	(12,70)
13RS065830	RS 65830	.648	(16,50)	.280	(7,11)	23/64	(9,12)
13RS066850	RS 66850	.668	(16,97)	.506	(12,85)	15/16	(23,81)
13RS066851	RS 66851	.670	(17,02)	.350	(8,90)	.200	(5,08)
13RS068711	RS 68711	.687	(17,45)	.260	(6,60)	.457	(11,61)
13RS068712	RS 68712	.687	(17,45)	.156	(3,96)	1/8	(3,18)
13RS069038	RS 69038	.680	(17,27)	.600	(15,24)	.56	(14,22)
13RS069039	RS 69039	.680	(17,27)	.390	(9,91)	5/8	(15,88)
13RS070086	RS 70086	.700	(17,78)	.335	(8,51)	.866	(22,00)
13RS071820	RS 71820	.718	(18,24)	.526	(13,36)	7/32	(5,55)
13RS071821	RS 71821	.720	(18,29)	.392	(9,96)	.230	(5,84)
13RS071828	RS 71828	.718	(18,24)	.526	(13,36)	9/32	(7,14)
13RS072050	RS 72050	.720	(18,29)	.515	(13,08)	.49	(12,45)
13RS073030	RS 73030	.730	(18,54)	.265	(6,73)	.295	(7,49)
13RS075009	RS 75009	.750	(19,05)	.320	(8,13)	.500	(12,70)
13RS075010	RS 75010	.750	(19,05)	.280	(7,11)	.440	(11,18)
13RS075011	RS 75011	.754	(19,15)	.531	(13,49)	.451	(11,46)
13RS075012	RS 75012	3/4	(19,05)	.260	(6,60)	3/4	(19,05)
13RS075013	RS 75013	.750	(19,05)	.255	(6,48)	.290	(7,37)
13RS075020	RS 75020	.740	(18,80)	.250	(6,35)	1/4	(6,35)
13RS075021	RS 75021	.744	(18,90)	.397	(10,08)	.371	(9,42)
13RS075022	RS 75022	.745	(18,92)	.387	(9,83)	.187	(4,75)
13RS075023	RS 75023	.752	(19,10)	.480	(12,19)	.226	(5,74)
13RS075024	RS 75024	3/4	(19,05)	.315	(8,00)	5/16	(7,94)
13RS075025	RS 75025	.750	(19,05)	.258	(6,55)	7/16	(11,10)

New Sizes

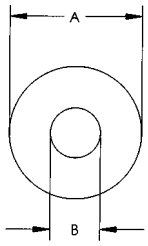

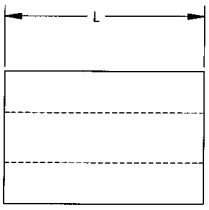

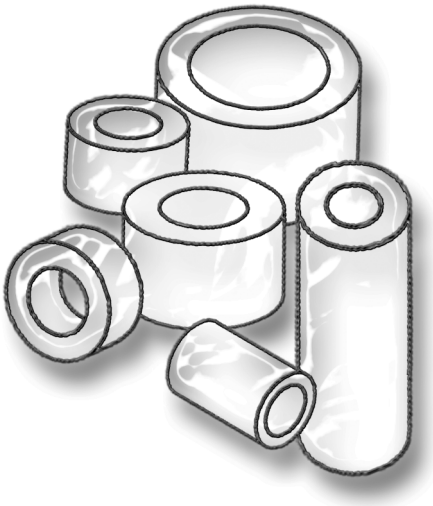

SECTION V

SPECIAL NYLON SPACERS

New Sizes

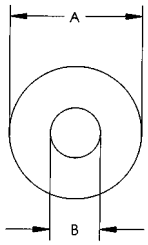

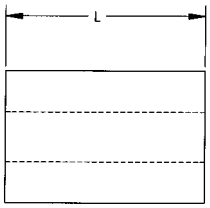

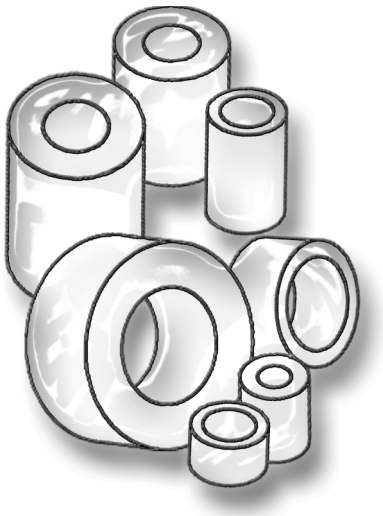

ITEM NUMBER	DESCRIPTION	A		B		L	
13RS075026	RS 75026	.750	(19,05)	.260	(6,60)	.375	(9,53)
13RS075027	RS 75027	3/4	(19,05)	5/16	(7,94)	9/16	(14,29)
13RS075028	RS 75028	3/4	(19,05)	.266	(6,76)	5/16	(7,94)
13RS075029	RS 75029	.750	(19,05)	.370	(9,40)	11/32	(8,71)
13RS075030	RS 75030	.750	(19,05)	.406	(10,32)	.562	(14,27)
13RS075031	RS 75031	.750	(19,05)	.315	(8,00)	.187	(4,75)
13RS075032	RS 75032	.750	(19,05)	.385	(9,78)	13/64	(5,16)
13RS075033	RS 75033	3/4	(19,05)	1/4	(6,35)	3/16	(4,76)
13RS075034	RS 75034	.750	(19,05)	.515	(13,08)	.340	(8,64)
13RS075035	RS 75035	.750	(19,05)	.245	(6,25)	.361	(9,17)
13RS075036	RS 75036	.750	(19,05)	.312	(7,92)	.938	(23,82)
13RS075037	RS 75037	.745	(18,92)	.250	(6,35)	3/8	(9,53)
13RS075039	RS 75039	.750	(19,05)	.490	(12,45)	3/8	(9,53)
13RS075040	RS 75040	.750	(19,05)	.323	(8,20)	.250	(6,35)
13RS075041	RS 75041	.740	(18,80)	.390	(9,91)	1	(25,40)
13RS075042	RS 75042	.750	(19,05)	.260	6,60)	.625	(15,88)
13RS075043	RS 75043	.740	(18,80)	.310	(7,87)	.437	(11,10)
13RS075044	RS 75044	1-3/4	(44,45)	5/8	(15,88)	1/4	(6,35)
13RS075045	RS 75045	.745	(18,92)	.385	(9,78)	5/16	(7,92)
13RS075046	RS 75046	.750	(19,05)	.460	(11,68)	1/4	(6,35)
13RS075047	RS 75047	3/4	(19,05)	.380	(9,65)	.472	(11,99)
13RS075048	RS 75048	.750	(19,05)	.250	(6,35)	.500	(12,70)
13RS075049	RS 75049	.750	(19,05)	.312	(7,92)	.250	(6,35)
13RS075050	RS 75050	.750	(19,05)	.344	(8,74)	.500	(12,70)
13RS075051	RS 75051	3/4	(19,05)	.260	(6,60)	1	(25,40)
13RS075052	RS 75052	.750	(19,05)	.250	(6,35)	.878	(22,30)
13RS075065	RS 75065	3/4	(19,05)	.260	(6,60)	9/16	(14,29)
13RS075070	RS 75070	.750	(19,05)	.510	(12,95)	.700	(17,78)
13RS075071	RS 75071	.750	(19,05)	.510	(12,95)	.375	(9,53
13RS075075	RS 75075	3/4	(19,05)	.320	(8,13)	3/4	(19,05)
13RS075076	RS 75076	.750	(19,05)	.320	(8,13)	1	(25,40)
13RS075077	RS 75077	.755	(19,18)	.400	(10,16)	.290	(7,73)
13RS075078	RS 75078	.750	(19,05)	.344	(8,74)	.250	(6,35)
13RS075079	RS 75079	.750	(19,05)	.200	(5,08)	1.000	(25,40)
13RS075080	RS 75080	.750	(19,05)	.260	(6,60)	.500	(12,70)
13RS075081	RS 75081	3/4	(19,05)	3/8	(9,53)	3/8	(9,53)
13RS075082	RS 75082	3/4	(19,05)	13/64	(5,16)	.100	(2,54)
13RS075086	RS 75086	.760	(19,30)	.401	(10,19)	.600	(15,24)
13RS075087	RS 75087	.750	(19,05)	.327	(8,31)	.188	(4,78)
13RS075088	RS 75088	.750	(19,05)	.187	(4,75)	.500	(12,70)
13RS075990	RS 75990	.760	(19,30)	.394	(10,01)	.910	(23,11)
13RS075991	RS 75991	.780	(19,81)	.501	(17,73)	.205	(5,21)
13RS077530	RS 77530	.775	(19,69)	.507	(12,89)	1/4	(6,35)
13RS077531	RS 77531	.770	(19,56)	.434	(11,02)	.377	(9,58)
13RS081045	RS 81045	.803	(20,40)	.520	(13,21)	1/2	(12,70)
13RS081222	RS 81222	.812	(20,63)	.312	(7,93)	1/8	(3,18)
13RS081223	RS 81223	.812	(20,63)	.403	(10,24)	.250	(6,35)
13RS081224	RS 81224	.812	(20,63)	.403	(10,24)	.710	(18,03)
13RS081262	RS 81262	.825	(20,95)	.203	(5,16)	5/8	(15,88)
13RS081263	RS 81263	.825	(20,95)	.257	(6,53)	.370	(9,40)
13RS083531	RS 83531	.835	(21,21)	.540	(13,72)	.188	(4,78)

SPECIAL NYLON SPACERS

ITEM NUMBER	DESCRIPTION	A		B		L	
13RS084101	RS 84101	.841	(21,36)	.605	(15,37)	.600	(15,24)
13RS087045	RS 87045	.870	(22,10)	.531	(13,49)	25/64	(9,91)
13RS087046	RS 87046	.866	(22,00)	1/4	(6,35)	.394	(10,01)
13RS087047	RS 87047	.870	(22,10)	.610	(15,49)	.500	(12,70)
13RS087536	RS 87536	.870	(22,10)	.527	(13,39)	.875	(22,23)
13RS087537	RS 87537	.875	(22,23)	.330	(8,38)	.375	(9,53)
13RS087539	RS 87539	.875	(22,23)	.375	(9,53)	.312	(7,92)
13RS087540	RS 87540	.875	(22,23)	.265	(6,73)	.375	(9,53)
13RS087541	RS 87541	.875	(22,23)	.325	(8,26)	.250	(6,35)
13RS087542	RS 87542	.875	(22,23)	.265	(6,73)	.250	(6,35)
13RS087550	RS 87550	.875	(22,23)	.251	(6,38)	.625	(15,88)
13RS087551	RS 87551	.875	(22,23)	.265	(6,73)	.156	(3,96)
13RS087555	RS 87555	.875	(22,23)	.280	(7,11)	.500	(12,70)
13RS087556	RS 87556	.875	(22,23)	.265	(6,73)	3/4	(19,05)
13RS087557	RS 87557	7/8	(22,23)	27/64	(10,72)	3/8	(9,53)
13RS089037	RS 89037	.885	(22,48)	.438	(11,13)	.370	(9,40)
13RS089038	RS 89038	.907	(23,04)	.780	(19,81)	.315	(8,00)
13RS091775	RS 91775	.917	(23,29)	.785	(19,94)	.750	(19,05)
13RS094550	RS 94550	.946	(24,03)	.248	(6,30)	.500	(12,70)
13RS094551	RS 94551	.984	(24,99)	.509	(12,93)	.984	(24,99)
13RS097518	RS 97518	.975	(24,76)	.390	(9,91)	1.180	(29,97)
13RS098528	RS 98528	.985	(25,02)	.285	(7,24)	1/4	(6,35)
13RS098550	RS 98550	.980	(24,89)	.352	(8,84)	1/2	(12,70)
13RS098552	RS 98552	1”	(25,40)	.328	(8,33)	1.000	(25,40)
13RS098551	RS 98551	1”	(25,40)	5/16	(7,94)	1/4	(6,35)
13RS100008	RS 100008	1”	(25,40)	.450	(11,43)	.219	(5,56)
13RS100009	RS 100009	1”	(25,40)	.530	(13,46)	.500	(12,70)
13RS100010	RS 100010	1.000	(25,40)	.650	(16,51)	.373	(9,47)
13RS100011	RS 100011	.998	(23,35)	.523	(13,28)	.453	(11,51)
13RS100012	RS 100012	1.00	(25,40)	.250	(6,35)	1/8	(3,18)
13RS100013	RS 100013	.990	(25,15)	.344	(8,74)	5/16	(7,92)
13RS100014	RS 100014	1.00	(25,40)	.260	(6,60)	3/8	(9,53)
13RS100015	RS 100015	1.000	(25,40)	.344	(8,74)	.435	(11,05)
13RS100016	RS 100016	1.000	(25,40)	.265	(6,73)	.188	(4,78)
13RS100018	RS 100018	1.00	(25,40)	.250	(6,35)	3/16	(4,76)
13RS100020	RS 100020	.990	(25,15)	.187	(4,75)	1/4	(6,35)
13RS100021	RS 100021	1”	(25,40)	.250	(6,35)	1/4	(6,35)
13RS100022	RS 100022	1.00	(25,40)	.375	(9,53)	.800	(20,32)
13RS100025	RS 100025	1.00	(25,40)	.915	(23,24)	1/4	(6,35)
13RS100026	RS 100026	1.00	(25,40)	.250	(6,35)	7/16	(11,10)
13RS100030	RS 100030	1.00	(25,40)	.250	(6,35)	.225	(5,72)
13RS100031	RS 100031	1.00	(25,40)	.517	(13,13)	.375	(9,52)
13RS100036	RS 100036	1.000	(25,40)	.385	(9,78)	.340	(8,64)
13RS100037	RS 100037	1.00	(25,40)	.385	(9,78)	3/8	(9,53)
13RS100038	RS 100038	1.00	(25,40)	.200	(5,08)	3/8	(9,53)
13RS100043	RS 100043	1.00	(25,40)	.406	(10,31)	7/16	(11,10)
13RS100050	RS 100050	1.00	(25,40)	.755	(19,18)	13/64	(5,16)
13RS100051	RS 100051	1.00	(25,40)	.643	(16,33)	.500	(12,70)
13RS100054	RS 100054	1.00	(25,40)	.375	(9,53)	.50	(12,70)
13RS100055	RS 100055	1.080	(27,43)	.950	(24,13)	.875	(22,23)
13RS100056	RS 100056	1.00	(25,40)	.765	(19,43)	9/16	(14,29)

New Sizes

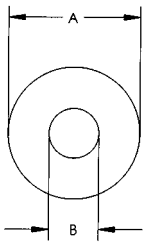

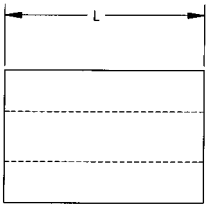

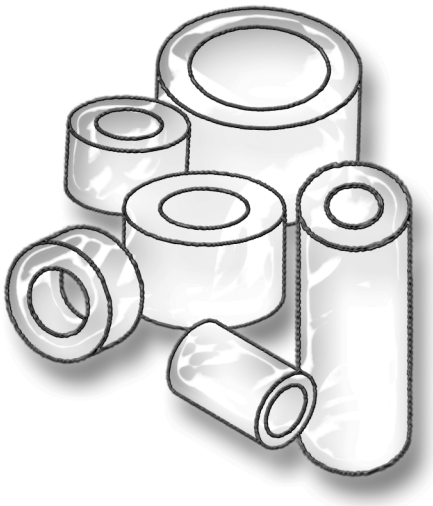

SECTION
V

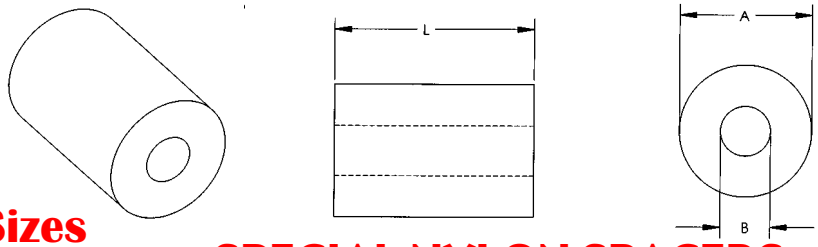

New Sizes

SPECIAL NYLON SPACERS

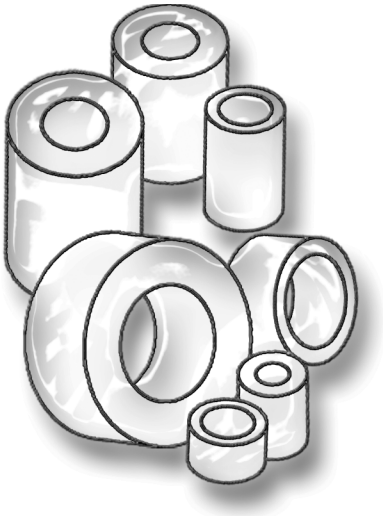

ITEM NUMBER	DESCRIPTION	A		B		L	
13RS100057	RS 100057	1.18	(29,97)	.250	(6,35)	.217	(5,51)
13RS100058	RS 100058	.984	(24,99)	.366	(9,29)	3/8	(9,53)
13RS100059	RS 100059	1.000	(25,40)	.517	(13,13)	.687	(17,45)
13RS100060	RS 100060	.987	(25,07)	.500	(12,70)	3/8	(9,53)
13RS100061	RS 100061	1.000	(25,40)	.517	(13,13)	.312	(7,92)
13RS100062	RS 100062	1.000	(25,40)	.562	(14,27)	.910	(23,11)
13RS100555	RS 100555	.986	(25,04)	.375	(9,53)	1/4	(6,35)
13RS105720	RS 105720	1.057	(26,85)	.812	(20,63)	1/8	(3,18)
13RS106212	RS 106212	1.055	(26,80)	.740	(18,80)	3/16	(4,76)
13RS112027	RS 112027	1.120	(28,45)	1.015	(25,78)	.375	(9,53)
13RS112028	RS 112028	1.120	(28,45)	.281	(7,14)	7/16	(11,10)
13RS112030	RS 112030	1.240	(31,50)	.505.	(12,83)	.500	(12,70)
13RS119600	RS 119600	1.190	(30,23)	.315	(8,00)	.600	(15,24)
13RS125075	RS 125075	1-1/4	(31,75)	.177	(4,50)	5/8	(15,88)
13RS125080	RS 125080	1.250	(31,75)	.642	(16,31)	.082	(12,08)
13RS125081	RS 125081	1.250	(31,75)	.875	(22,22)	9/16	(14,29)
13RS125082	RS 125082	1.25	(31,75)	.255	(6,48)	.531	(13,49)
13RS125250	RS 125250	1.240	(31,50)	.312	(7,93)	1/4	(7,92)
13RS125311	RS 125311	1-1/4	(31,75)	.177	(4,50)	9/16	(14,29)
13RS125312	RS 125312	1.250	(31,75)	.510	(12,95)	5/16	(6,35)
13RS125313	RS 125313	1.239	(31,47)	.761	(19,33)	9/16	(14,29)
13RS125387	RS 125387	1.25	(31,75)	.380	(9,65)	.38	(9,65)
13RS125500	RS 125500	1.24	(31,50)	.307	(7,80)	1/2	(12,70)
13RS125501	RS 125501	1.250	(31,75)	.400	(10,16)	5/8	(15,88)
13RS125750	RS 125750	1 1/4	(31,75)	17/64	(6,76)	.750	(19,05)
13RS126210	RS 126210	1.262	(32,05)	1.043	(26,49)	.950	(24,13)
13RS132056	RS 132056	1.320	(33,53)	1.031	(26,19)	.562	(14,27)
13RS131255	RS 131255	1.312	(33,33)	1.078	(27,38)	3/4	(19,05)
13RS131256	RS 131256	1-5/16	(33,33)	.385	(9,78)	.100	(2,54)
13RS137520	RS 137520	1.375	(33,33)	.656	(16,66)	1/8	(3,18)
13RS137521	RS 137521	1.375	(34.93)	.766	(19,46)	.156	(3,96)
13RS146050	RS 146050	1.460	(37,08)	.521	(13,23)	.500	(12,70)
13RS150011	RS 150011	1.500	(38,10)	1.187	(30,15)	23/64	(9,13)
13RS150050	RS 150050	1.50	(38,10)	1.02	(25,91)	.50	(12,70)
13RS162590	RS 162590	1.625	(41,28)	1.388	(35,26)	3/32	(2,38)
13RS162591	RS 162591	1 1/16	(26,99)	.680	(17,27)	.200	(5,08)
13RS175032	RS 175032	1.750	(44,45)	.928	(23,57)	9/32	(7,14)
13RS187509	RS 187509	1.188	(30,18)	.813	(20,65)	.250	(6,35)
13RS187510	RS 187510	1.860	(47,24)	.250	(6,35)	1	(25,40)
13RS213579	RS 213579	2 1/8	(53,98)	1-27/64	(36,09)	.280	(7,11)
13RS213580	RS 213580	2.135	(54,23)	1.760	(44,70)	1/8	(3,18)
13RS213581	RS 213581	2.13	(54,10)	1.63	(41,40)	.130	(3,30)
13RS231251	RS 231251	2 1/32	(70,97)	1.420	(36,07)	.350	(8,89)

COVED SPACERS

Micro Plastics Coved Spacers are molded in tough and resilient natural colored Nylon 6/6 plastic. Spacers fit a variety of tube diameters from 3/4" to 1 1/8" and have inside diameters from .218 to .375 for attachment screws. Coved Spacers are used for attaching parts to rods, tubes, or curved contours.

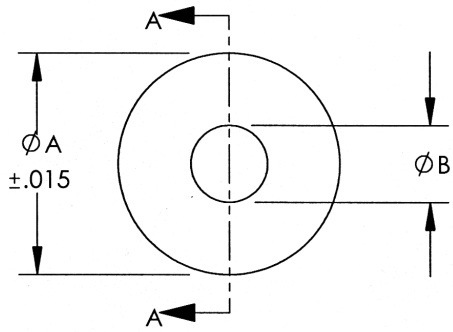

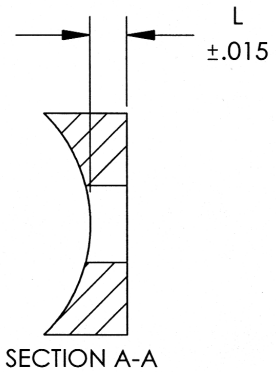

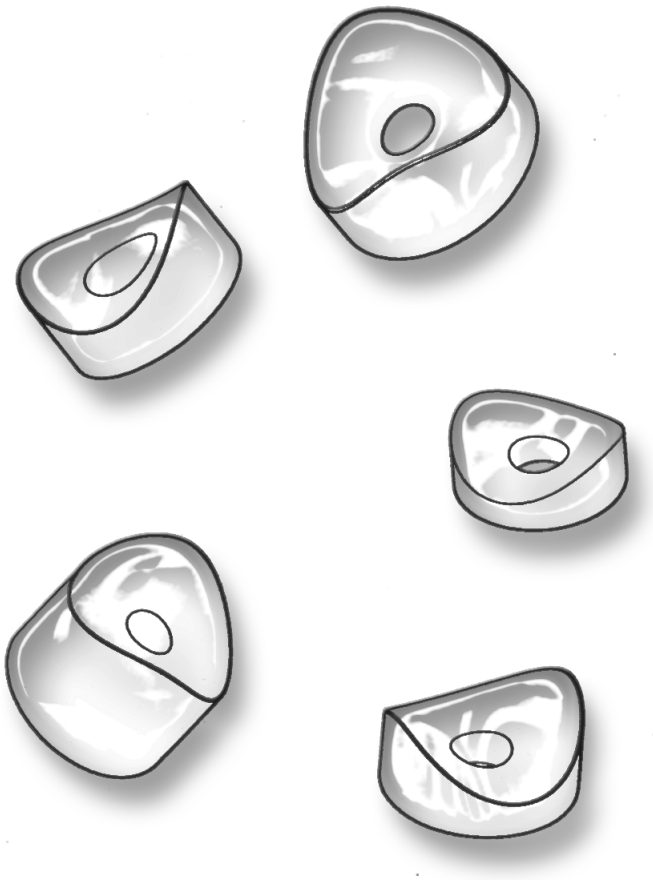

New Product Line

ITEM NUMBER	TUBE DIAMETER (Ref.)	A	B	L
13CS0001	.750 (19,05)	.750 (19,05)	.260 (6,60)	.125 (3,18)
13CS0002	.875 (22,23)	.843 (21,41)	.257 (6,53)	.156 (3,96)
13CS0003	1.000 (25,40)	.835 (21,21)	.218 (5,54)	.500 (12,70)
13CS0004	1.00 (25,40)	1.000 (25,40)	.260 (6,60)	.250 (6,35)
13CS0005	1.00 (25,40)	1.000 (25,40)	.325 (8,26)	.250 (6,35)
13CS0006	1.100 (27,94)	1.000 (25,40)	.250 (6,35)	.125 (3,18)
13CS0007	1.125 (28,58)	.875 (22,23)	.375 (9,53)	.250 (6,35)

SECTION
V

Molded from Type 66 Nylon and then machine tapped, these spacers are low cost insulators that can be used in many electrical applications.

Special sizes can be made to order from our large untapped spacer inventory.

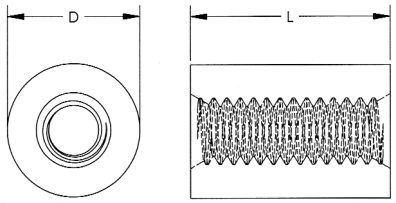

NOTE:
ON THREADED SPACERS 3/4" AND LONGER, THE TAP IS 3/8" FROM EACH END AND NOT CONTINUOUS THROUGH.

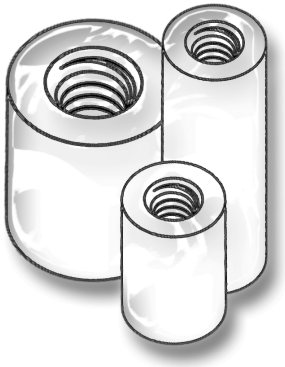

TAPPED NYLON SPACERS

ITEM NUMBER	DESCRIPTION		D		L		TAPPED
15TSP055	TSP	55	3/16	(4,76)	7/16	(11,11)	2-56
15TSP056	TSP	56	3/16	(4,76)	1/2	(12,70)	2-56
15TSP106	TSP	106	3/16	(4,76)	17/64	(6,73)	4-40*
15TSP057	TSP	57	1/4	(6,35)	1/4	(6,35)	2-56
15TSP001	TSP	1	1/4	(6,35)	1/4	(6,35)	4-40*
15TSP050	TSP	50	1/4	(6,35)	5/16	(7,94)	4-40*
15TSP002	TSP	2	1/4	(6,35)	3/8	(9,53)	4-40*
15TSP003	TSP	3	1/4	(6,35)	1/2	(12,70)	4-40*
15TSP036	TSP	36	1/4	(6,35)	5/8	(15,88)	4-40*
15TSP004	TSP	4	1/4	(6,35)	3/4	(19,05)	4-40*
15TSP037	TSP	37	1/4	(6,35)	7/8	(22,22)	4-40*
15TSP005	TSP	5	1/4	(6,35)	1	(25,40)	4-40*
15TSP006	TSP	6	1/4	(6,35)	1/4	(6,35)	6-32**
15TSP054	TSP	54	1/4	(6,35)	5/16	(7,94)	6-32**
15TSP007	TSP	7	1/4	(6,35)	3/8	(9,53)	6-32**
15TSP008	TSP	8	1/4	(6,35)	1/2	(12,70)	6-32**
15TSP051	TSP	51	1/4	(6,35)	9/16	(14,29)	6-32**
15TSP038	TSP	38	1/4	(6,35)	5/8	(15,88)	6-32**
15TSP009	TSP	9	1/4	(6,35)	3/4	(19,05)	6-32**
15TSP052	TSP	52	1/4	(6,35)	15/16	(23,81)	6-32**
15TSP039	TSP	39	1/4	(6,35)	7/8	(22,22)	6-32**
15TSP010	TSP	10	1/4	(6,35)	1	(25,40)	6-32**
15TSP053	TSP	53	1/4	(6,35)	1 1/2	(38,10)	6-32**
15TSP011	TSP	11	1/4	(6,35)	1/4	(6,35)	8-32***
15TSP012	TSP	12	1/4	(6,35)	3/8	(9,53)	8-32***
15TSP013	TSP	13	1/4	(6,35)	1/2	(12,70)	8-32***
15TSP040	TSP	40	1/4	(6,35)	5/8	(15,88)	8-32***
15TSP014	TSP	14	1/4	(6,35)	3/4	(19,05)	8-32***
15TSP041	TSP	41	1/4	(6,35)	7/8	(22,22)	8-32***
15TSP015	TSP	15	1/4	(6,35)	1	(25,40)	8-32***
15TSP016	TSP	16	5/16	(7,94)	1/4	(6,35)	8-32***
15TSP017	TSP	17	5/16	(7,94)	3/8	(9,53)	8-32***
15TSP018	TSP	18	5/16	(7,94)	1/2	(12,70)	8-32***
15TSP042	TSP	42	5/16	(7,94)	5/8	(15,88)	8-32***
15TSP019	TSP	19	5/16	(7,94)	3/4	(19,05)	8-32***
15TSP043	TSP	43	5/16	(7,94)	7/8	(22,22)	8-32***
15TSP020	TSP	20	5/16	(7,94)	1	(25,40)	8-32***
15TSP021	TSP	21	3/8	(9,53)	1/4	(6,35)	10-32****
15TSP022	TSP	22	3/8	(9,53)	3/8	(9,53)	10-32****
15TSP023	TSP	23	3/8	(9,53)	1/2	(12,70	10-32****

***NOTE THESE ITEMS ARE AVAILABLE IN METRIC THREADS.**

4-40* Available in M3 Thread
6-32 Available in M3.5 Thread**
8-32* Available in M4 Thread**
10-32** Available in M5 Thread**

To order metric threads, simply add an M to the Part Number.

EXAMPLE: 15TSP006 with a 6-32 Thread,

Becomes 15MTSP006 with a M3.5 Thread

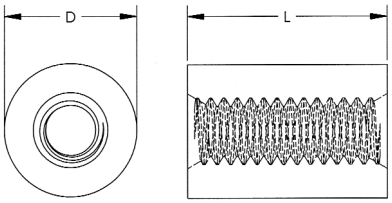

TAPPED NYLON SPACERS

ITEM NUMBER	DESCRIPTION	D		L		TAPPED
15TSP044	TSP 44	3/8	(9,53)	5/8	(15,88)	10-32****
15TSP024	TSP 24	3/8	(9,53)	3/4	(19,05)	10-32****
15TSP045	TSP 45	3/8	(9,53)	7/8	(22,22)	10-32****
15TSP025	TSP 25	3/8	(9,53)	1	(25,40)	10-32****
15TSP026	TSP 26	1/2	(12,70)	1/4	(6,35)	10-32****
15TSP027	TSP 27	1/2	(12,70)	3/8	(9,53)	10-32****
15TSP028	TSP 28	1/2	(12,70)	1/2	(12,70)	10-32****
15TSP046	TSP 46	1/2	(12,70)	5/8	(15,88)	10-32****
15TSP029	TSP 29	1/2	(12,70)	3/4	(19,05)	10-32****
15TSP047	TSP 47	1/2	(12,70)	7/8	(22,22)	10-32****
15TSP030	TSP 30	1/2	(12,70)	1	(25,40)	10-32****
15TSP031	TSP 31	1/2	(12,70)	1/4	(6,35)	1/4-20
15TSP032	TSP 32	1/2	(12,70)	3/8	(9,53)	1/4-20
15TSP033	TSP 33	1/2	(12,70)	1/2	(12,70)	1/4-20
15TSP048	TSP 48	1/2	(12,70)	5/8	(15,88)	1/4-20
15TSP034	TSP 34	1/2	(12,70)	3/4	(19,05)	1/4-20
15TSP049	TSP 49	1/2	(12,70)	7/8	(22,22)	1/4-20
15TSP035	TSP 35	1/2	(12,70)	1	(25,40)	1/4-20
15TSP058	TSP 58	3/16	(4,76)	3/8	(9,53)	2-56
15TSP099	TSP 99	3/16	(4,76)	5/32	(3,97)	4-40
15TSP100	TSP 100	3/16	(4,76)	3/16	(4,76)	4-40
15TSP101	TSP 101	3/16	(4,76)	1/4	(6,35)	4-40
15TSP102	TSP 102	3/16	(4,76)	5/16	(7,94)	4-40
15TSP103	TSP 103	3/16	(4,76)	3/8	(9,53)	4-40
15TSP104	TSP 104	3/16	(4,76)	7/16	(11,11)	4-40
15TSP105	TSP 105	3/16	(4,76)	1/2	(12,70)	4-40
15TSP107	TSP 107	3/16	(4,76)	5/8	(15,88)	4-40
15TSP109	TSP 109	3/16	(4,76)	3/4	(19,05)	4-40
15TSP111	TSP 111	3/16	(4,76)	7/8	(22,22)	4-40
15TSP115	TSP 115	3/16	(4,76)	1	(25,40)	4-40
15TSP140	TSP 140	3/16	(4,76)	3/16	(4,76)	6-32
15TSP141	TSP 141	3/16	(4,76)	1/4	(6,35)	6-32
15TSP142	TSP 142	3/16	(4,76)	5/16	(7,94)	6-32
15TSP143	TSP 143	3/16	(4,76)	3/8	(9,53)	6-32
15TSP144	TSP 144	3/16	(4,76)	7/16	(11,11)	6-32
15TSP145	TSP 145	3/16	(4,76)	1/2	(12,70)	6-32
15TSP147	TSP 147	3/16	(4,76)	5/8	(15,88)	6-32
15TSP149	TSP 149	3/16	(4,76)	3/4	(19,05)	6-32
15TSP151	TSP 151	3/16	(4,76)	7/8	(22,22)	6-32
15TSP155	TSP 155	3/16	(4,76)	1	(25,40)	6-32

NOTE:
ON THREADED SPACERS 3/4" AND LONGER, THE TAP IS 3/8" FROM EACH END AND NOT CONTINUOUS THROUGH.

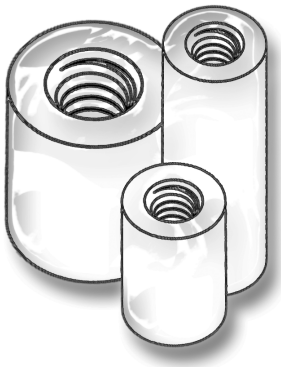

***NOTE THESE ITEMS ARE AVAILABLE IN METRIC THREADS.**

4-40* Available in M3 Thread
6-32 Available in M3.5 Thread**
8-32* Available in M4 Thread**
10-32** Available in M5 Thread**

SECTION
V

HEX NYLON SPACERS

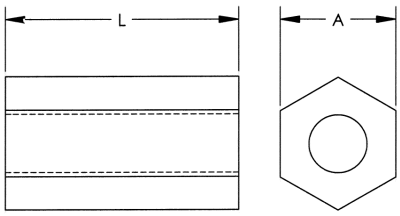

New Sizes

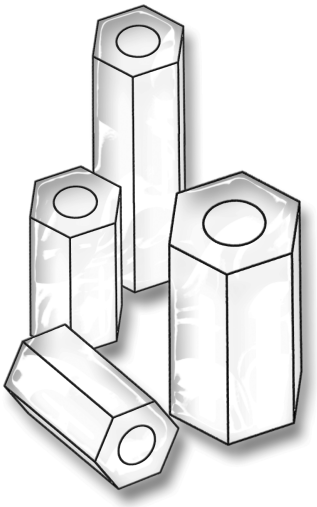

Self-threading, use with tapping screws designed for plastics.

ITEM NUMBER	DESCRIPTION	SELF TAPPING ID	SCREW	L	A
35HSP112	HSP 112	.072 (1,83)	2	7/16 (11,11)	3/16 (4,75)
35HSP115	HSP 115	.072 (1,83)	2	5/16 (7,93)	3/16 (4,75)
35HSP114	HSP 114	.072 (1,83)	2	3/8 (9,53)	3/16 (4,75)
35HSP113	HSP 113	.075 (1,91)	2	9/16 (14,28)	3/16 (4,75)
35HSP101	HSP 101	.091 (2,31)	4	1/4 (6,35)	3/16 (4,75)
35HSP102	HSP 102	.091 (2,31)	4	3/8 (9,53)	3/16 (4,75)
35HSP124	HSP 124	.091 (2,31)	4	3/4 (19,05)	3/16 (4,75)
35HSP103	HSP 103	.091 (2,31)	4	1/2 (12,70)	3/16 (4,75)
35HSP111	HSP 111	.091 (2,31)	4	9/16 (14,27)	3/16 (4,75)
35HSP119	HSP 119	.091 (2,31)	4	5/8 (15,88)	3/16 (4,75)
35HSP104	HSP 104	.091 (2,31)	4	7/16 (11,10)	3/16 (4,75)
35HSP116	HSP 116	.091 (2,31)	4	7/8 (22,22)	3/16 (4,75)
35HSP106	HSP 106	.115 (2,92)	6	1/4 (6,35)	3/16 (4,75)
35HSP107	HSP 107	.115 (2,92)	6	3/8 (9,53)	3/16 (4,75)
35HSP108	HSP 108	.115 (2,92)	6	1/2 (12,70)	3/16 (4,75)
35HSP120	HSP 120	.115 (2,92)	6	5/8 (15,88)	3/16 (4,75)
35HSP109	HSP 109	.115 (2,92)	6	3/4 (19,05)	3/16 (4,75)
35HSP001	HSP 1	.091 (2,31)	4	1/4 (6,35)	1/4 (6,35)
35HSP022	HSP 22	.091 (2,31)	4	5/16 (7,92)	1/4 (6,35)
35HSP002	HSP 2	.091 (2,31)	4	3/8 (9,53)	1/4 (6,35)
35HSP029	HSP 29	.091 (2,31)	4	7/16 (11,10)	1/4 (6,35)
35HSP003	HSP 3	.091 (2,31)	4	1/2 (12,70)	1/4 (6,35)
35HSP024	HSP 24	.091 (2,31)	4	9/16 (14,27)	1/4 (6,35)
35HSP019	HSP 19	.091 (2,31)	4	5/8 (15,88)	1/4 (6,35)
35HSP004	HSP 4	.091 (2,31)	4	3/4 (19,05)	1/4 (6,35)
35HSP016	HSP 16	.091 (2,31)	4	7/8 (22,22)	1/4 (6,35)
35HSP005	HSP 5	.091 (2,31)	4	1 (25,40)	1/4 (6,35)
35HSP037	HSP 37	.094 (2,39)	4	.826 (20,98)	1/4 (6,35)
35HSP032	HSP 32	.091 (2,31)	4	1-1/2 (38,10)	1/4 (6,35)
35HSP038	HSP 38	.111 (2,82)	6	9/16 (14,29)	1/4 (6,35)
35HSP035	HSP 35	.115 (2,92)	6	3/16 (4,75)	1/4 (6,35)
35HSP006	HSP 6	.115 (2,92)	6	1/4 (6,35)	1/4 (6,35)
35HSP007	HSP 7	.115 (2,92)	6	3/8 (9,53)	1/4 (6,35)
35HSP040	HSP 40	.111 (2,82)	6	7/16 (11,11)	1/4 (6,35)
35HSP008	HSP 8	.115 (2,92)	6	1/2 (12,70)	1/4 (6,35)
35HSP020	HSP 20	.115 (2,92)	6	5/8 (15,88)	1/4 (6,35)
35HSP009	HSP 9	.115 (2,92)	6	3/4 (19,05)	1/4 (6,35)
35HSP017	HSP 17	.115 (2,92)	6	7/8 (22,22)	1/4 (6,35)
35HSP010	HSP 10	.115 (2,92)	6	1 (25,40)	1/4 (6,35)
35HSP023	HSP 23	.115 (2,92)	6	1-1/4 (31,75)	1/4 (6,35)
35HSP011	HSP 11	.140 (3,56)	8	1/4 (6,35)	1/4 (6,35)
35HSP012	HSP 12	.140 (3,56)	8	3/8 (9,53)	1/4 (6,35)
35HSP013	HSP 13	.140 (3,56)	8	1/2 (12,70)	1/4 (6,35)
35HSP021	HSP 21	.140 (3,56)	8	5/8 (15,88)	1/4 (6,35)
35HSP041	HSP 41	.134 (3,40)	8	43/64 (17,06)	1/4 (6,35)
35HSP014	HSP 14	.140 (3,56)	8	3/4 (19,05)	1/4 (6,35)
35HSP018	HSP 18	.140 (3,56)	8	7/8 (22,22)	1/4 (6,35)
35HSP015	HSP 15	.140 (3,56)	8	1 (25,40)	1/4 (6,35)
35HSP208	HSP 208	.115 (2,92)	6	1/2 (12,70)	5/16 (7,92)
35HSP220	HSP 220	.115 (2,92)	6	7/8 (22,23)	5/16 (7,92)
35HSP225	HSP 225	.115 (2,92)	6	1-1/8 (28,58)	5/16 (7,92)
35HSP309	HSP 309	.110 (2,74)	6	3/4 (19,05)	3/8 (9,53)
35HSP207	HSP 207	.225 (5,72)	1/4	7/32 (5,56)	5/16 (7,92)
35HSP400	HSP 400	.195 (4,95)	1/4-20	1/2 (12,70)	3/8 (9,53)

SECTION V

ITEM NUMBER	DESCRIPTION	TAPPED	L		A		
14HTSP112	HTSP 112	2-56	7/16	(11,11)	3/16	(4,75)	
14HTSP115	HTSP 115	2-56	5/16	(7,94)	3/16	(4,75)	
14HTSP114	HTSP 114	2-56	3/8	(9,53)	3/16	(4,75)	
14HTSP113	HTSP 113	2-56	9/16	(14,28)	3/16	(4,75)	
14HTSP101	HTSP 101	4-40*	1/4	(6,35)	3/16	(4,75)	
14HTSP102	HTSP 102	4-40*	3/8	(9,53)	3/16	(4,75)	
14HTSP124	HTSP 124	4-40*	3/4	(19,05)	3/16	(4,75)	
14HTSP103	HTSP 103	4-40*	1/2	(12,70)	3/16	(4,75)	
14HTSP111	HTSP 111	4-40*	9/16	(14,27)	3/16	(4,75)	
14HTSP119	HTSP 119	4-40*	5/8	(15,88)	3/16	(4,75)	
14HTSP104	HTSP 104	4-40*	7/16	(11,10)	3/16	(4,75)	
14HTSP116	HTSP 116	4-40*	7/8	(22,22)	3/16	(4,75)	
14HTSP106	HTSP 106	6-32**	1/4	(6,35)	3/16	(4,75)	
14HTSP107	HTSP 107	6-32**	3/8	(9,53)	3/16	(4,75)	
14HTSP108	HTSP 108	6-32**	1/2	(12,70)	3/16	(4,75)	
14HTSP120	HTSP 120	6-32**	5/8	(15,88)	3/16	(4,75)	
14HTSP109	HTSP 109	6-32**	3/4	(19,05)	3/16	(4,75)	
14HTSP036	HTSP 36	6-32**	1-1/2	(38,10)	1/4	(6,35)	NOTE: no thru hole
14HTSP001	HTSP 1	4-40*	1/4	(6,35)	1/4	(6,35)	
14HTSP022	HTSP 22	4-40*	5/16	(7,92)	1/4	(6,35)	
14HTSP002	HTSP 2	4-40*	3/8	(9,53)	1/4	(6,35)	
14HTSP029	HTSP 29	4-40*	7/16	(11,10)	1/4	(6,35)	
14HTSP003	HTSP 3	4-40*	1/2	(12,70)	1/4	(6,35)	
14HTSP024	HTSP 24	4-40*	9/16	(14,27)	1/4	(6,35)	
14HTSP019	HTSP 19	4-40*	5/8	(15,88)	1/4	(6,35)	
14HTSP004	HTSP 4	4-40*	3/4	(19,05)	1/4	(6,35)	
14HTSP016	HTSP 16	4-40*	7/8	(22,22)	1/4	(6,35)	
14HTSP037	HTSP 37	4-40*	.826	(20,98)	1/4	(6,35)	
14HTSP005	HTSP 5	4-40*	1	(25,40)	1/4	(6,35)	
14HTSP032	HTSP 32	4-40*	1-1/2	(38,10)	1/4	(6,35)	
14HTSP038	HTSP 38	6-32**	9/16	(14,29)	1/4	(6,35)	
14HTSP039	HTSP 39	4-40*	1-3/8	(34,93)	1/4	(6,35)	NOTE: no thru hole
14HTSP035	HTSP 35	6-32**	3/16	(4,75)	1/4	(6,35)	
14HTSP006	HTSP 6	6-32**	1/4	(6,35)	1/4	(6,35)	
14HTSP007	HTSP 7	6-32**	3/8	(9,53)	1/4	(6,35)	
14HTSP040	HTSP 40	6-32**	7/16	(11,11)	1/4	(6,35)	
14HTSP008	HTSP 8	6-32**	1/2	(12,70)	1/4	(6,35)	
14HTSP020	HTSP 20	6-32**	5/8	(15,88)	1/4	(6,35)	
14HTSP009	HTSP 9	6-32**	3/4	(19,05)	1/4	(6,35)	
14HTSP017	HTSP 17	6-32**	7/8	(22,22)	1/4	(6,35)	
14HTSP010	HTSP 10	6-32**	1	(25,40)	1/4	(6,35)	
14HTSP023	HTSP 23	6-32**	1-1/4	(31,75)	1/4	(6,35)	
14HTSP011	HTSP 11	8-32***	1/4	(6,35)	1/4	(6,35)	
14HTSP012	HTSP 12	8-32***	3/8	(9,53)	1/4	(6,35)	
14HTSP013	HTSP 13	8-32***	1/2	(12,70)	1/4	(6,35)	
14HTSP021	HTSP 21	8-32***	5/8	(15,88)	1/4	(6,35)	
14HTSP041	HTSP 41	8-32***	43/64	(17,06)	1/4	(6,35)	
14HTSP014	HTSP 14	8-32***	3/4	(19,05)	1/4	(6,35)	
14HTSP018	HTSP 18	8-32***	7/8	(22,22)	1/4	(6,35)	
14HTSP015	HTSP 15	8-32***	1	(25,40)	1/4	(6,35)	
14HTSP208	HTSP 208	6-32**	1/2	(12,70)	5/16	(7,92)	
14HTSP220	HTSP 220	6-32**	7/8	(22,22)	5/16	(7,92)	
14HTSP225	HTSP 225	6-32**	1-1/8	(28,58)	5/16	(7,92)	
14HTSP309	HTSP 309	6-32**	3/4	(19,05)	3/8	(9,53)	
14HTSP207	HTSP 207	1/4-20	7/32	(5,56)	5/16	(7,92)	
14HTSP400	HTSP 400	1/4-20	1/2	(12,70)	3/8	(9,53)	

***NOTE THESE ITEMS ARE AVAILABLE IN METRIC THREADS.**
4-40* Available in M3 Thread
6-32 Available in M3.5 Thread**
8-32*Available in M 4 Thread**

HEX NYLON TAPPED SPACERS

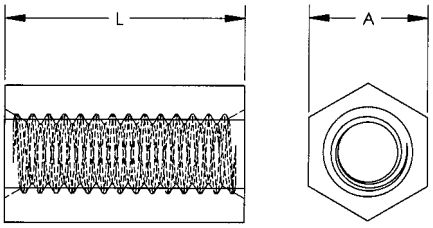

NOTE:
ON THREADED SPACERS 3/4" AND LONGER, THE TAP IS 3/8" MINIMUM FROM EACH END AND NOT CONTINUOUS THROUGH.

New Sizes

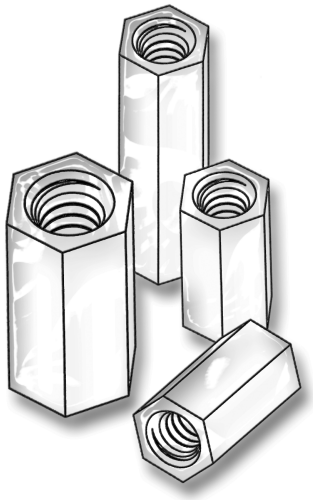

To order metric threads, simply add an M to the Part Number.

EXAMPLE: 14HTSP106 with a 6-32 Thread,

Becomes 14MHTSP106 with a M3.5 Thread

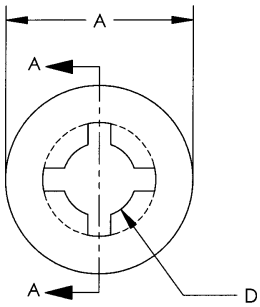

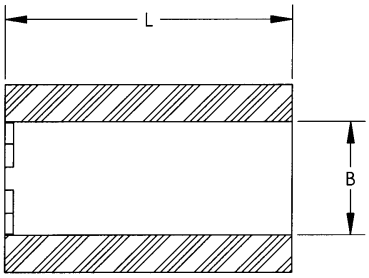

NYLON RETAINING SPACERS

Similar to our standard spacers, but with a specially configured ID designed to grip the screw shank. The spacer remains attached to the screw, for quick, easy assembly.

ITEM NUMBER	A		B		D		L	
13SPRT031	1/4	(6,35)	.115	(2,92)	.078	(1,98)	1/8	(3,18)
13SPRT032	1/4	(6,35)	.115	(2,92)	.078	(1,98)	3/16	(4,76)
13SPRT033	1/4	(6,35)	.115	(2,92)	.078	(1,98)	1/4	(6,35)
13SPRT034	1/4	(6,35)	.115	(2,92)	.078	(1,98)	5/16	(7,94)
13SPRT035	1/4	(6,35)	.115	(2,92)	.078	(1,98)	3/8	(9,53)
13SPRT036	1/4	(6,35)	.115	(2,92)	.078	(1,98)	7/16	(11,11)
13SPRT037	1/4	(6,35)	.115	(2,92)	.078	(1,98)	1/2	(12,70)
13SPRT038	1/4	(6,35)	.115	(2,92)	.078	(1,98)	9/16	(14,29)
13SPRT039	1/4	(6,35)	.115	(2,92)	.078	(1,98)	5/8	(15,88)
13SPRT040	1/4	(6,35)	.115	(2,92)	.078	(1,98)	11/16	(17,46)
13SPRT041	1/4	(6,35)	.115	(2,92)	.078	(1,98)	3/4	(19,05)
13SPRT042	1/4	(6,35)	.115	(2,92)	.078	(1,98)	13/16	(20,64)
13SPRT043	1/4	(6,35)	.115	(2,92)	.078	(1,98)	7/8	(22,23)
13SPRT044	1/4	(6,35)	.115	(2,92)	.078	(1,98)	15/16	(23,81)
13SPRT045	1/4	(6,35)	.115	(2,92)	.078	(1,98)	1	(25,40)
13SPRT046	1/4	(6,35)	.156	(3,96)	.102	(2,59)	1/8	(3,18)
13SPRT047	1/4	(6,35)	.156	(3,96)	.102	(2,59)	3/16	(4,76)
13SPRT048	1/4	(6,35)	.156	(3,96)	.102	(2,59)	1/4	(6,35)
13SPRT049	1/4	(6,35)	.156	(3,96)	.102	(2,59)	5/16	(7,94)
13SPRT050	1/4	(6,35)	.156	(3,96)	.102	(2,59)	3/8	(9,53)
13SPRT051	1/4	(6,35)	.156	(3,96)	.102	(2,59)	7/16	(11,11)
13SPRT052	1/4	(6,35)	.156	(3,96)	.102	(2,59)	1/2	(12,70)
13SPRT053	1/4	(6,35)	.156	(3,96)	.102	(2,59)	9/16	(14,29)
13SPRT054	1/4	(6,35)	.156	(3,96)	.102	(2,59)	5/8	(15,88)
13SPRT055	1/4	(6,35)	.156	(3,96)	.102	(2,59)	11/16	(17,46)
13SPRT056	1/4	(6,35)	.156	(3,96)	.102	(2,59)	3/4	(19,05)
13SPRT057	1/4	(6,35)	.156	(3,96)	.102	(2,59)	13/16	(20,64)
13SPRT058	1/4	(6,35)	.156	(3,96)	.102	(2,59)	7/8	(22,23)
13SPRT059	1/4	(6,35)	.156	(3,96)	.102	(2,59)	15/16	(23,81)
13SPRT060	1/4	(6,35)	.156	(3,96)	.102	(2,59)	1	(25,40)
13SPRT061	5/16	(7,94)	.198	(5,03)	.128	(3,25)	1/8	(3,18)
13SPRT062	5/16	(7,94)	.198	(5,03)	.128	(3,25)	3/16	(4,76)
13SPRT063	5/16	(7,94)	.198	(5,03)	.128	(3,25)	1/4	(6,35)
13SPRT064	5/16	(7,94)	.198	(5,03)	.128	(3,25)	5/16	(7,94)
13SPRT065	5/16	(7,94)	.198	(5,03)	.128	(3,25)	3/8	(9,53)
13SPRT066	5/16	(7,94)	.198	(5,03)	.128	(3,25)	7/16	(11,11)
13SPRT067	5/16	(7,94)	.198	(5,03)	.128	(3,25)	1/2	(12,70)
13SPRT068	5/16	(7,94)	.198	(5,03)	.128	(3,25)	9/16	(14,29)
13SPRT069	5/16	(7,94)	.198	(5,03)	.128	(3,25)	5/8	(15,88)
13SPRT070	5/16	(7,94)	.198	(5,03)	.128	(3,25)	11/16	(17,46)
13SPRT071	5/16	(7,94)	.198	(5,03)	.128	(3,25)	3/4	(19,05)
13SPRT072	5/16	(7,94)	.198	(5,03)	.128	(3,25)	13/16	(20,64)
13SPRT073	5/16	(7,94)	.198	(5,03)	.128	(3,25)	7/8	(22,23)
13SPRT074	5/16	(7,94)	.198	(5,03)	.128	(3,25)	15/16	(23,81)
13SPRT075	5/16	(7,94)	.198	(5,03)	.128	(3,25)	1	(25,40)

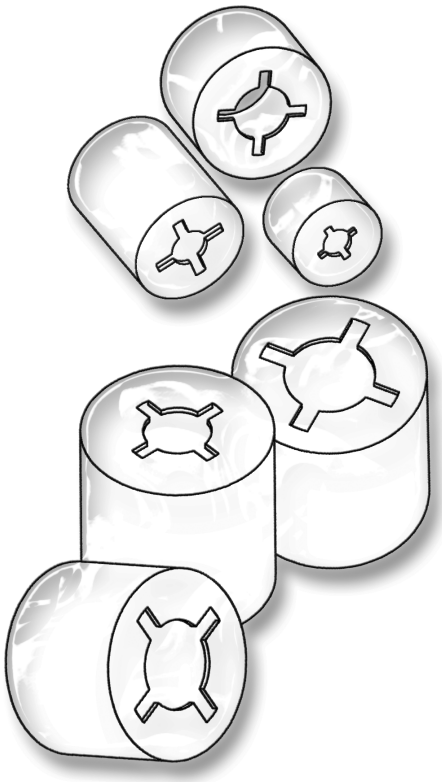

NYLON RETAINING SPACERS

Similar to our standard spacers, but with a specially configured ID designed to grip the screw shank. The spacer remains attached to the screw, for quick, easy assembly.

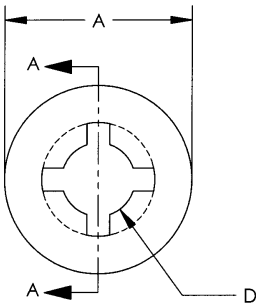

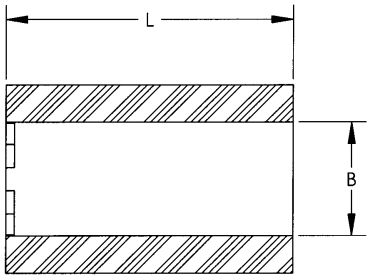
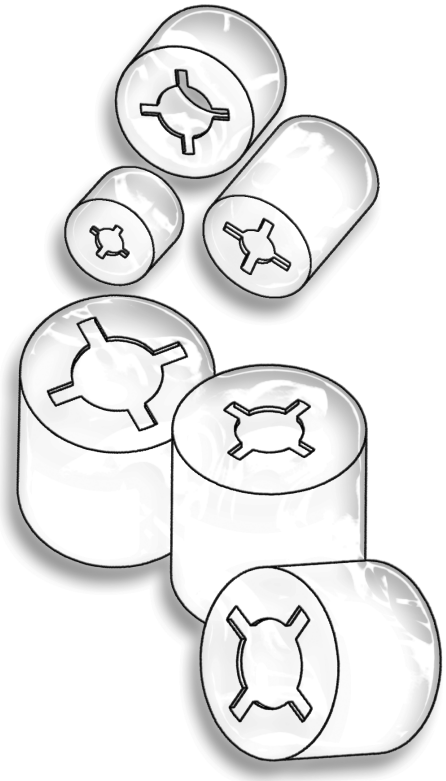
ITEM NUMBER	A		B		D		L	
13SPRT076	3/8	(9,53)	.240	(6,10)	.152	(3,86)	1/8	(3,18)
13SPRT077	3/8	(9,53)	.240	(6,10)	.152	(3,86)	3/16	(4,76)
13SPRT078	3/8	(9,53)	.240	(6,10)	.152	(3,86)	1/4	(6,35)
13SPRT079	3/8	(9,53)	.240	(6,10)	.152	(3,86)	5/16	(7,94)
13SPRT080	3/8	(9,53)	.240	(6,10)	.152	(3,86)	3/8	(9,53)
13SPRT081	3/8	(9,53)	.240	(6,10)	.152	(3,86)	7/16	(11,11)
13SPRT082	3/8	(9,53)	.240	(6,10)	.152	(3,86)	1/2	(12,70)
13SPRT083	3/8	(9,53)	.240	(6,10)	.152	(3,86)	9/16	(14,29)
13SPRT084	3/8	(9,53)	.240	(6,10)	.152	(3,86)	5/8	(15,88)
13SPRT085	3/8	(9,53)	.240	(6,10)	.152	(3,86)	11/16	(17,46)
13SPRT086	3/8	(9,53)	.240	(6,10)	.152	(3,86)	3/4	(19,05)
13SPRT087	3/8	(9,53)	.240	(6,10)	.152	(3,86)	13/16	(20,64)
13SPRT088	3/8	(9,53)	.240	(6,10)	.152	(3,86)	7/8	(22,23)
13SPRT089	3/8	(9,53)	.240	(6,10)	.152	(3,86)	15/16	(23,81)
13SPRT090	3/8	(9,53)	.240	(6,10)	.152	(3,86)	1	(25,40)
13SPRT091	1/2	(12,70)	.277	(7,04)	.177	(4,50)	1/8	(3,18)
13SPRT092	1/2	(12,70)	.277	(7,04)	.177	(4,50)	3/16	(4,76)
13SPRT093	1/2	(12,70)	.277	(7,04)	.177	(4,50)	1/4	(6,35)
13SPRT094	1/2	(12,70)	.277	(7,04)	.177	(4,50)	5/16	(7,94)
13SPRT095	1/2	(12,70)	.277	(7,04)	.177	(4,50)	3/8	(9,53)
13SPRT096	1/2	(12,70)	.277	(7,04)	.177	(4,50)	7/16	(11,11)
13SPRT097	1/2	(12,70)	.277	(7,04)	.177	(4,50)	1/2	(12,70)
13SPRT098	1/2	(12,70)	.277	(7,04)	.177	(4,50)	9/16	(14,29)
13SPRT099	1/2	(12,70)	.277	(7,04)	.177	(4,50)	5/8	(15,88)
13SPRT100	1/2	(12,70)	.277	(7,04)	.177	(4,50)	11/16	(17,46)
13SPRT101	1/2	(12,70)	.277	(7,04)	.177	(4,50)	3/4	(19,05)
13SPRT102	1/2	(12,70)	.277	(7,04)	.177	(4,50)	13/16	(20,64)
13SPRT103	1/2	(12,70)	.277	(7,04)	.177	(4,50)	7/8	(22,23)
13SPRT104	1/2	(12,70)	.277	(7,04)	.177	(4,50)	15/16	(23,81)
13SPRT105	1/2	(12,70)	.277	(7,04)	.177	(4,50)	1	(25,40)
13SPRT106	1/2	(12,70)	.375	(9,53)	.234	(5,94)	1/8	(3,18)
13SPRT107	1/2	(12,70)	.375	(9,53)	.234	(5,94)	3/16	(4,76)
13SPRT108	1/2	(12,70)	.375	(9,53)	.234	(5,94)	1/4	(6,35)
13SPRT109	1/2	(12,70)	.375	(9,53)	.234	(5,94)	5/16	(7,94)
13SPRT110	1/2	(12,70)	.375	(9,53)	.234	(5,94)	3/8	(9,53)
13SPRT111	1/2	(12,70)	.375	(9,53)	.234	(5,94)	7/16	(11,11)
13SPRT112	1/2	(12,70)	.375	(9,53)	.234	(5,94)	1/2	(12,70)
13SPRT113	1/2	(12,70)	.375	(9,53)	.234	(5,94)	9/16	(14,29)
13SPRT114	1/2	(12,70)	.375	(9,53)	.234	(5,94)	5/8	(15,88)
13SPRT115	1/2	(12,70)	.375	(9,53)	.234	(5,94)	11/16	(17,46)
13SPRT116	1/2	(12,70)	.375	(9,53)	.234	(5,94)	3/4	(19,05)
13SPRT117	1/2	(12,70)	.375	(9,53)	.234	(5,94)	13/16	(20,64)
13SPRT118	1/2	(12,70)	.375	(9,53)	.234	(5,94)	7/8	(22,23)
13SPRT119	1/2	(12,70)	.375	(9,53)	.234	(5,94)	15/16	(23,81)
13SPRT120	1/2	(12,70)	.375	(9,53)	.234	(5,94)	1	(25,40)